

SERVICE PUBLICITY

苏州鑫恒鑫电机有限公司

FAN MANUFACTURING EXPERT

FANOVA(SUZHOU) MOTOR TECHNOLOGY CO., LTD



产品目录
CATALOGUE

EC-AC Series

EC Centrifugal Fan · · · · · · · · · · · · · · · · · · 01-98

后向离心风机 EC Backward centrifugal fan

支架风机 Backward centrifugal fan with support bracket

管道风机 Backward centrifugal combination duct fan

EC Axial Fan · · · · · · · · · · · · · · · · · · 99-136

带网罩的轴流风机 Axial fan with guard grille

带导风筒的轴流风机 Axial fan with wall ring

EC Blowers · · · · · · · · · · · · · · · · · · 137-176

前向离心风机 Forward centrifugal fan

单进风鼓风机 Single inlet centrifugal blower with scroll housing

双进风鼓风机 Dual inlet centrifugal blower with scroll housing

EC-DC Series

DC Centrifugal Fan · · · · · · · · · · · · · · · · · · 179-234

后向离心风机 Backward centrifugal fan

支架风机 Backward centrifugal fan with support bracket

DC Axial Fan · · · · · · · · · · · · · · · · · · 235-262

带网罩的轴流风机 Axial fan with guard grille

带导风筒的轴流风机 Axial fan with wall ring

DC Blowers · · · · · · · · · · · · · · · · · · 263-300

前向离心风机 Forward centrifugal fan

单进风鼓风机 Single inlet centrifugal blower with scroll housing

双进风鼓风机 Dual inlet centrifugal blower with scroll housing

Technical Support · · · · · · · · · · · · · · · · · · 301-317

风机型号最新命名原则

Fan Type latest Naming Principle

F	B	3	G	190	-	2A	PL	-	70
1	2	3	4	5		6	7		8

1: 公司Company

苏州鑫恒鑫电机有限公司Fanova (Suzhou) Motor Technology Co., LTD

2: 类型Type

M:电机Motor
A:轴流风机Axial fan
C:贯流风机Cross flow fan
W:带导风筒的轴流风机Axial fan with wall ring
G:带网罩的轴流风机Axial fan with guard grille combination
P:管道风机Backward centrifugal fan combination duct fan
B:后向离心风机Backward centrifugal fan
K:支架离心风机Backward centrifugal fan with support bracket
F:前向离心风机Forward centrifugal blower without scroll housing
D:双进风鼓风机Dual inlet centrifugal blower with scroll housing
S:单进风鼓风机Single inlet centrifugal blower with scroll housing

3:极数 (EC) / 极数 (AC)Number of poles (EC) / number of cores (AC)

EC:三相 3-core
AC:2-, 4-, 6-, 8- and 12-pole

4:电机类型Type of motor

G:EC 无刷电机EC Brushless motor
K:带电容的单相电机Single-phase motor with capacitor

5:风轮尺寸 (毫米Impeller diameter in mm)

190mm...

6:输入电压Input voltage

24: 24 VDC
48: 48 VDC
85: 85 VDC
110: 110 VDC
310: 310 VDC
1A:115 VAC
2A:230 VAC
3A:380 VAC

7:电气设计Electrical design

(数量的衍生产品A, B, C到.....1.2.3.....)(Number of derivative Products A,B,C.....1.2.3.....)

8:Mechanical design

(数量的衍生产品A, B, C到.....1.2.3.....)(Number of derivative Products A,B,C.....1.2.3.....)

苏州鑫恒鑫电机有限公司

公司简介 COMPANY PROFILE

苏州鑫恒鑫电机有限公司成立于2003年，是一家专注于EC离心风机、轴流风机、蜗壳风机的研发、设计、定制和生产的公司。

Fanova(Suzhou) Motor Technology Co., LTD was founded in 2003, is a focus on EC centrifugal fan, axial flow fan, volute fan research and development, design, customization and production of the company.

作为一家专业的EC风机生产制造商，我们拥有先进的生产设备和技术团队，致力于为客户提供全方位的解决方案。我们的产品广泛应用于各种行业，包括工业、商业和家庭领域，公司的应用领域涵盖净化设备、暖通空调设备、通风设备、交通设施、医疗卫生设施、家用电器、机械设备等。为客户提供高效、节能的风动力解决方案。

As a professional EC fan manufacturer, we have advanced production equipment and technical team, and are committed to providing customers with a full range of solutions. Our products are widely used in a variety of industries, including industrial, commercial and household fields, and the company's application areas cover purification equipment, HVAC equipment, ventilation equipment, transportation facilities, medical and health facilities, household appliances, machinery and equipment, etc. Provide customers with efficient and energy-saving wind power solutions.

公司拥有一支专业的研发团队，以推动产品的不断创新和技术突破。该公司的研发计划专注于探索新型塑料材料，增强电机和风扇设计，改进制造工艺，并且利用尖端技术，以满足客户和市场需求的不断变化。

The company has a professional R&D team to promote continuous innovation and technological breakthroughs in products. The company's R&D program is focused on exploring new plastic materials, enhancing motor and fan designs, improving manufacturing processes, and leveraging cutting-edge technologies to meet changing customer and market demands.

公司简介 COMPANY PROFILE

我们注重产品的设计和制造工艺，确保每一款产品都能满足客户的需求，我们的产品通过了多项国际认证，包括CE、TUV、ROHS等，为客户提供了可靠的保障。公司拥有内部质量管理体系，确保产品的质量稳定和可靠性。

We pay attention to the design and manufacturing process of products to ensure that each product can meet the needs of customers, and our products have passed a number of international certifications, including CE, TUV, ROHS, etc., providing customers with reliable guarantees. The company has an internal quality management system to ensure the stability and reliability of product quality.

公司致力于不断进行技术创新和产品升级，致力于为客户提供高质量的EC风扇产品和解决方案，满足不同应用领域的需求。公司将继续秉承环保节能的理念，为推动社会可持续发展做出更大的贡献，我们将继续加大研发投入，不断提升产品质量和技术水平，为客户创造更大的价值。我们期待与国内外各界朋友携手合作，共创美好未来。

The company is committed to continuous technological innovation and product upgrades, and is committed to providing customers with high-quality EC fan products and solutions to meet the needs of different application fields. The company will continue to uphold the concept of environmental protection and energy saving, and make greater contributions to the sustainable development of society, we will continue to increase investment in research and development, continuously improve product quality and technical level, and create greater value for customers. We look forward to working with friends from all walks of life at home and abroad to create a better future.

公司简介 COMPANY PROFILE







公司简介 COMPANY PROFILE















EC-AC Series

EC Centrifugal Fans

EC Centrifugal Fan



EC Backward Centrifugal Fans D133

- 材料**Material:** 塑料风轮Impeller: Plastic
  转子 Rotor: 电泳Electrophoresis
  端盖 Electronics housing: 压铸铝Die-cast aluminium
- 叶片数量**Number of blades:** 7
- 防护等级**Degree of protection:** IP 44
- 绝缘等级**Insulation class:** B
- 安装位置**Installation position:** 任意Any
- 模式**Mode:**连续工作制 Continuous operation (S1)

EC Backward Centrifugal Fans D133

- 旋转方向**Direction of rotation:** 正转，从转子方向Clockwise，viewed toward rotor
- 技术特性**Technical features:** 参见附图See connection diagram
- 泄漏电流**Touch curren:** < 3,5 mA
- 能效**Efficiency:** ErP2015
- 标准/证书**Valid For Approval/Standard**：CE,RoHS,ISO9001
  环境温度**Perm. ambient temp.**：-25℃~+60℃
- 安装**Mounting:** 免维护滚珠轴承Maintenance-free ball bearings

EC Centrifugal Fan

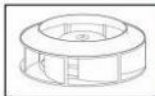	电机 Motor	曲线 Curve	额定电压 Nominal Voltage	额定电压范围 Nominal Voltage Range	频率 Frequency	电流 Current	转速 Speed	输入功率 Max. input Power
Type			VAC	VAC	Hz	A	RPM	W
FB3G133-2APL-50	BLEC53	Ⓐ	230	184~270	50/60	0.15	3200	18
FB3G133-2APL-51	BLEC53	Ⓑ	230	184~270	50/60	0.26	3900	37
FB3G133-2APL-70	BLEC72	Ⓒ	230	184~270	50/60	0.35	4500	48

噪音等级 Sound Pressure Level	风量 Air Flow	风压 Air Pressure	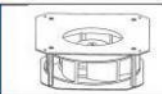	速度控制 Speed Control	接线图 Wiring Mode
dB(A)	m³/h	Pa	with support bracket		
58.9	219	228	FK3G133-2APL-50	0-10VDC PWM	F1
62	259	433	FK3G133-2APL-51		F1
67.8	450	433	FK3G133-2APL-70		F1

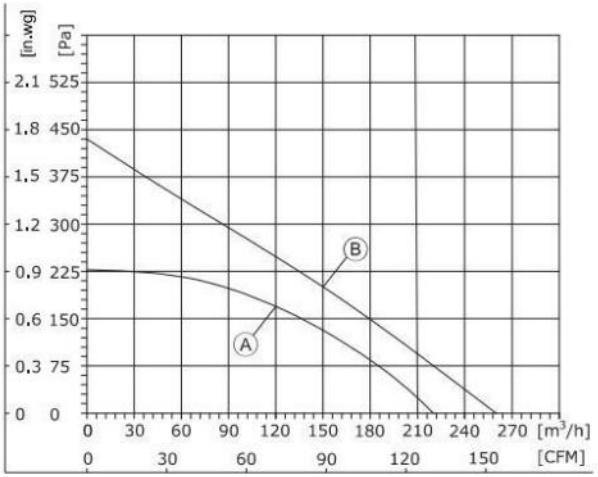

1、Air performance measured according to: ISO 5801, with DJ inlet ring without contact protection.
2、Intake-side sound level: LpA measured at 1 m distance from fan axis. The values given are only applicable under the specifi ed measuring conditions and may differ depending on the installation conditions.

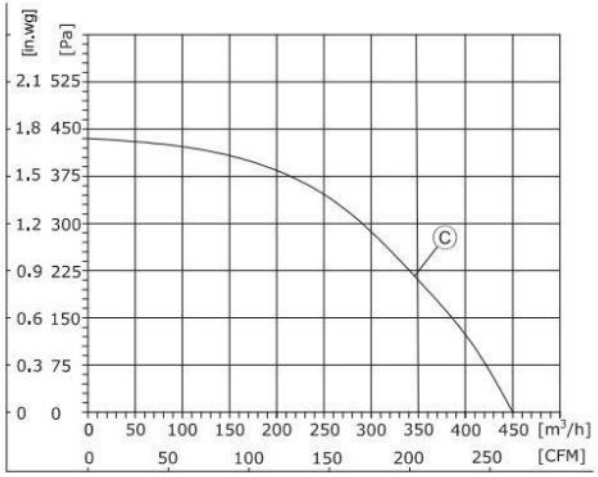

1、Air performance measured according to: ISO 5801, with DJ inlet ring without contact protection.
2、Intake-side sound level: LpA measured at 1 m distance from fan axis. The values given are only applicable under the specifi ed measuring conditions and may differ depending on the installation conditions.

(后向离心风机Centrifugal Fan)
FB3G133-2APL-50

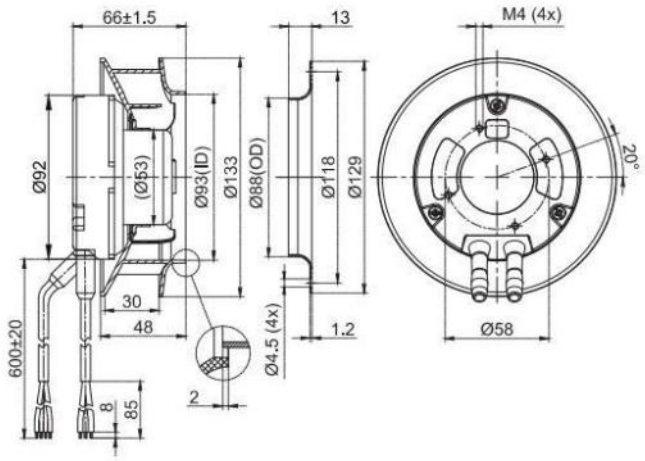

(后向离心风机Centrifugal Fan)
FB3G133-2APL-51

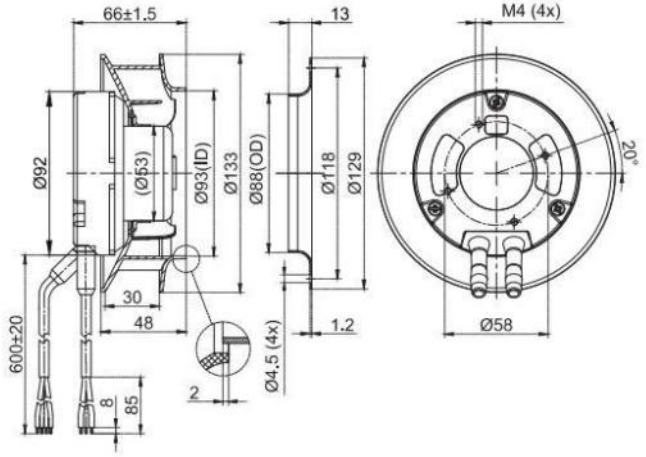

(支架离心风机Centrifugal Fan With Support Bracket)
FK3G133-2APL-50

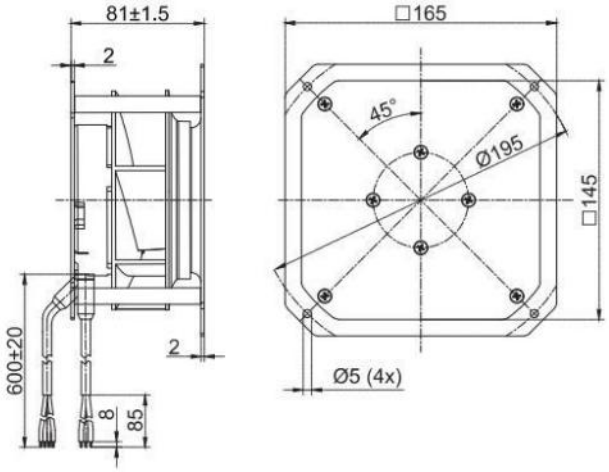

(支架离心风机Centrifugal Fan With Support Bracket)
FK3G133-2APL-51

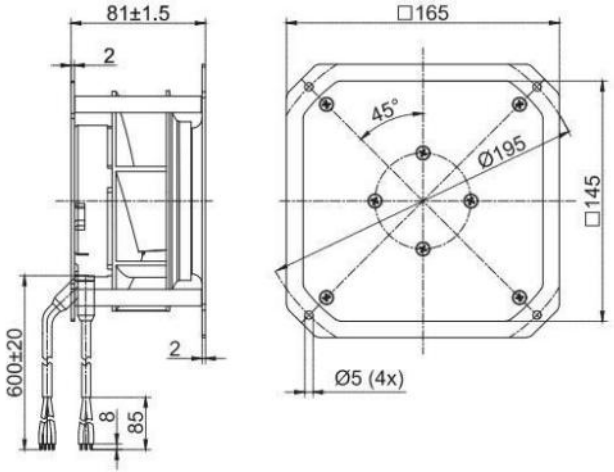

(后向离心风机Centrifugal Fan)
FB3G133-2APL-70

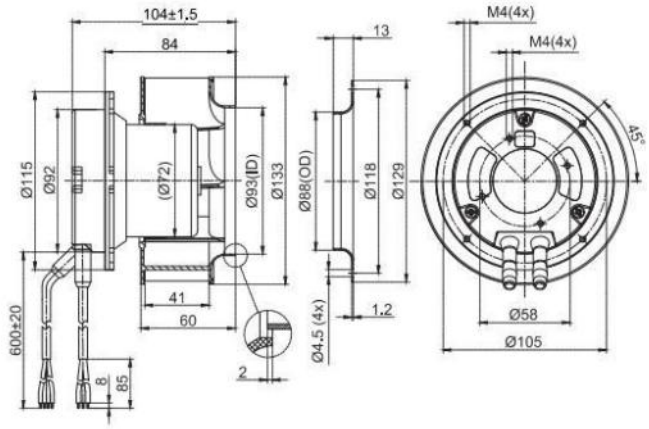

(支架离心风机Centrifugal Fan With Support Bracket)
FK3G133-2APL-70

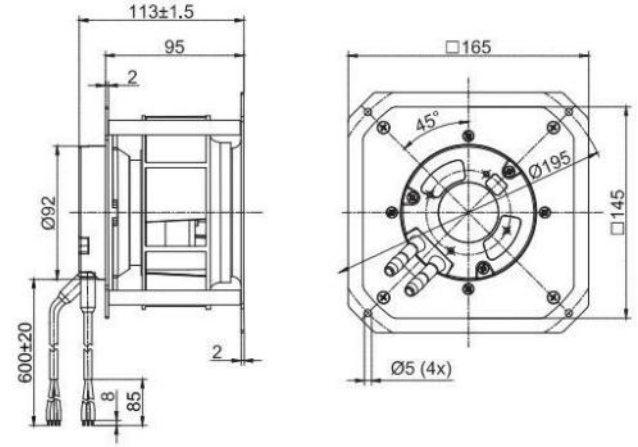



EC Backward Centrifugal Fans D175

- 材料**Material:** 塑料风轮Impeller: Plastic
  转子 Rotor: 电泳Electrophoresis
  端盖 Electronics housing: 压铸铝Die-cast aluminium
- 叶片数量**Number of blades:** 7
- 防护等级**Degree of protection:** IP 44
- 绝缘等级**Insulation class:** B
- 安装位置**Installation position:** 任意Any
- 模式**Mode:**连续工作制 Continuous operation (S1)

	电机 **Motor**	曲线 **Curve**	额定电压 **Nominal Voltage**	额定电压范围 **Nominal Voltage Range**	频率 **Frequency**	电流 **Current**	转速 **Speed**	输入功率 **Max. input Power**
Type			VAC	VAC	Hz	A	RPM	W
FB3G175-2APL-70	BLEC72	Ⓐ	230	184~270	50/60	0.8	4450	105
FB3G175-2APY-76	BLEC72	Ⓑ	230	184~270	50/60	0.3	3300	44
FB3G175-2APY-70	BLEC72	Ⓒ	230	184~270	50/60	0.5	4200	85

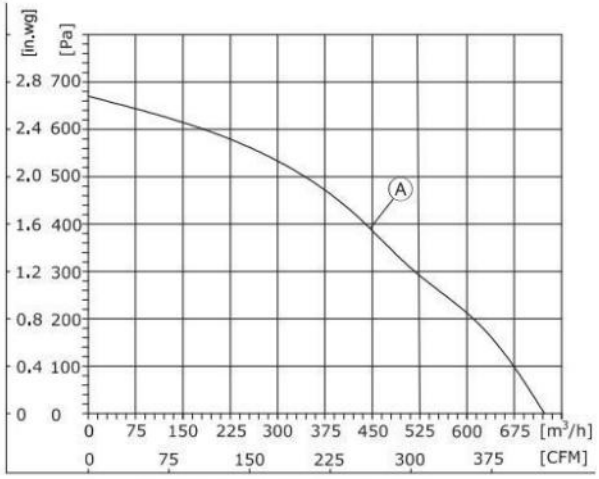

1、Air performance measured according to: ISO 5801, with DJ inlet ring without contact protection.
2、Intake-side sound level: LpA measured at 1 m distance from fan axis. The values given are only applicable under the specifi ed measuring conditions and may differ depending on the installation conditions.

EC Backward Centrifugal Fans D175

- 旋转方向**Direction of rotation:** 正转，从转子方向Clockwise，viewed toward rotor
- 技术特性**Technical features:** 参见附图See connection diagram
- 泄漏电流**Touch curren:** < 3,5 mA
- 能效**Efficiency:** ErP2015
- 标准/证书**Valid For Approval/Standard**：CE,RoHS,ISO9001
  环境温度**Perm. ambient temp.**：-25℃~+60℃
- 安装**Mounting:** 免维护滚珠轴承Maintenance-free ball bearings

噪音等级 **Sound pressure level**	风量 **Air Flow**	风压 **Air pressure**	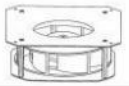	速度控制 **Speed Control**	接线图 **Wiring Mode**
dB(A)	m³/h	Pa	with support bracket		
76.4	723	667	FK3G175-2APL-70	0-10VDC PWM	F1
68	615	492	FK3G175-2APY-76		F1
78.2	750	670	FK3G175-2APY-70		F1

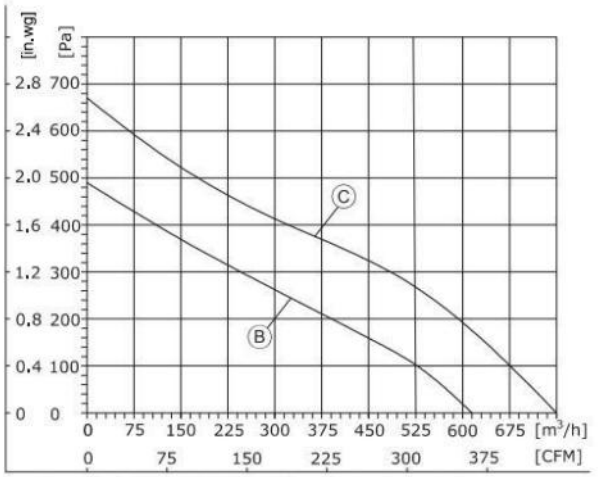

1、Air performance measured according to: ISO 5801, with DJ inlet ring without contact protection.
2、Intake-side sound level: LpA measured at 1 m distance from fan axis. The values given are only applicable under the specifi ed measuring conditions and may differ depending on the installation conditions.

(后向离心风机Centrifugal Fan)
FB3G175-2APL-70

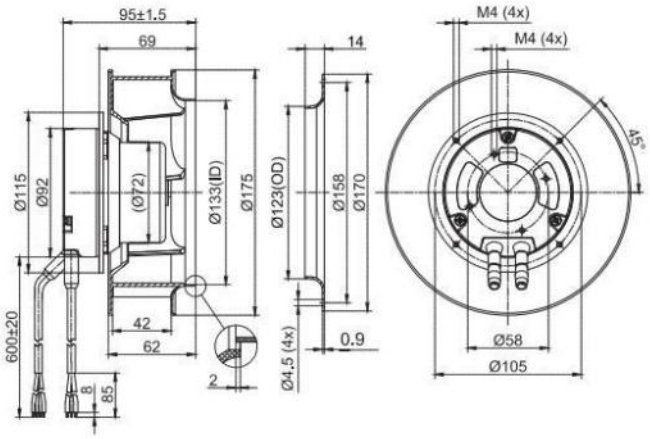

(后向离心风机Centrifugal Fan)
FB3G175-2APY-76

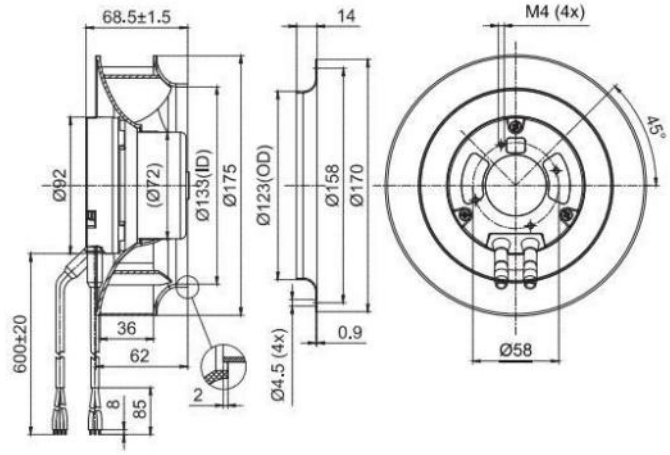

(支架离心风机Centrifugal Fan With Support Bracket)
FK3G175-2APL-70

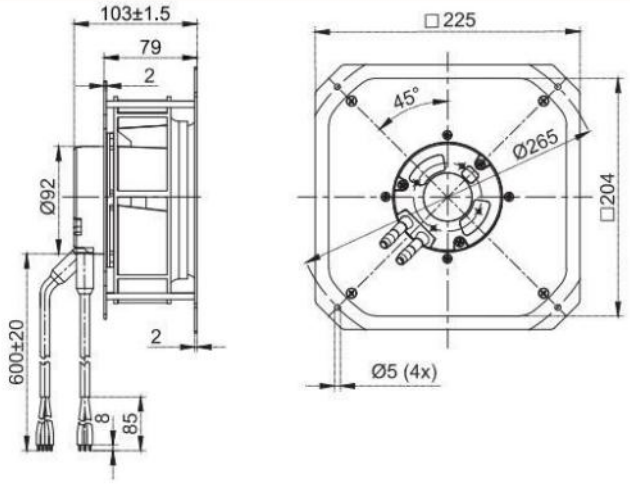

(支架离心风机Centrifugal Fan With Support Bracket)
FK3G175-2APY-76

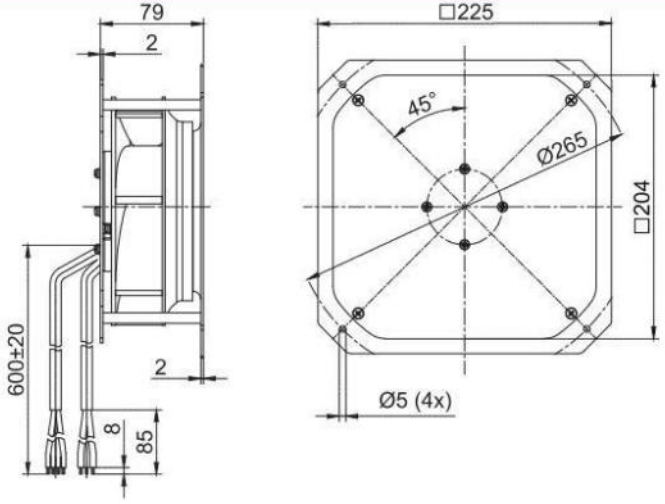

(后向离心风机Centrifugal Fan)
FB3G175-2APY-70

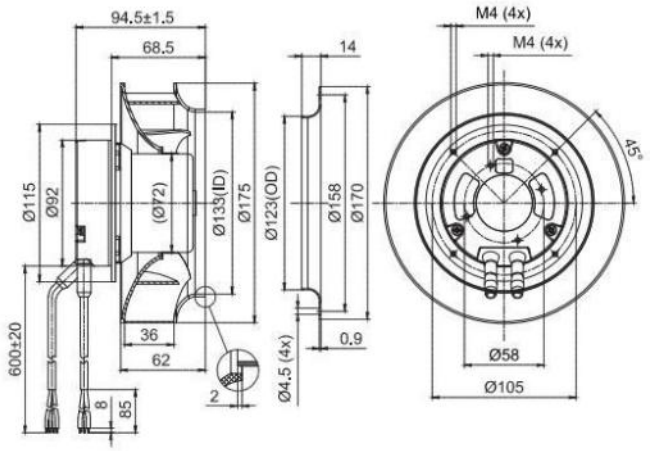

(支架离心风机Centrifugal Fan With Support Bracket)
FK3G175-2APY-70

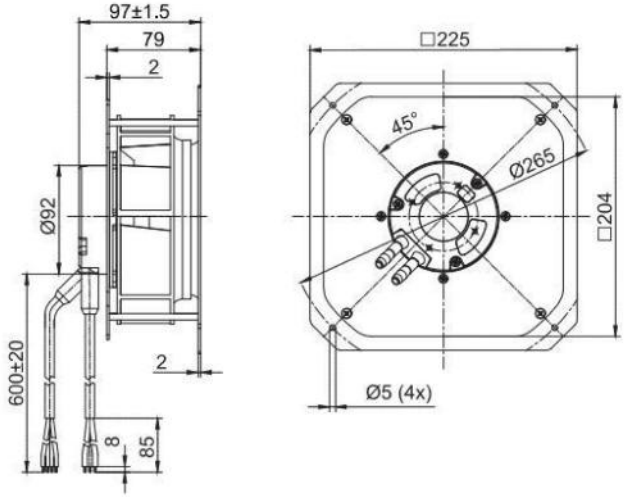

EC Centrifugal Fan



EC Backward Centrifugal Fans D190

- 材料**Material:** 塑料风轮Impeller: Plastic
  转子 Rotor: 电泳Electrophoresis
  端盖 Electronics housing: 压铸铝Die-cast aluminium
- 叶片数量**Number of blades:** 7
- 防护等级**Degree of protection:** IP 44
- 绝缘等级**Insulation class:** B
- 安装位置**Installation position:**任意 Any
- 模式**Mode:**连续工作制 Continuous operation (S1)

	电机 Motor	曲线 Curve	额定电压 Nominal Voltage	额定电压范围 Nominal Voltage Range	频率 Frequency	电流 Current	转速 Speed	输入功率 Max. input Power
Type			VAC	VAC	Hz	A	RPM	W
FB3G190-2APY-70	BLEC72	Ⓐ	230	184~270	50/60	0.55	3100	85
FB3G190-2APY-76	BLEC72	Ⓐ	230	184~270	50/60	0.55	3100	85
FB3G190-2APY-71	BLEC72	Ⓑ	230	184~270	50/60	0.7	3550	93
FB3G190-2APS-90	BLEC92	Ⓒ	230	184~270	50/60	1.2	4250	170

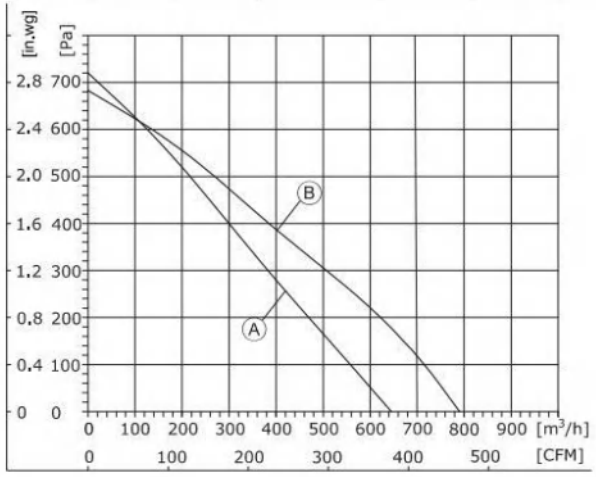

1、Air performance measured according to: ISO 5801, with DJ inlet ring without contact protection.
2、Intake-side sound level: LpA measured at 1 m distance from fan axis. The values given are only applicable under the specifi ed measuring conditions and may differ depending on the installation conditions.

EC Backward Centrifugal Fans D190

- 旋转方向**Direction of rotation:** 正转，从转子方向Clockwise，viewed toward rotor
- 技术特性**Technical features:** 参见附图See connection diagram
- 泄漏电流**Touch curren:** < 3,5 mA
- 能效**Efficiency:** ErP2015
- 标准/证书**Valid For Approval/Standard**：CE,RoHS,ISO9001
  环境温度**Perm. ambient temp.**：.-25℃~+60℃
- 安装**Mounting:** 免维护滚珠轴承Maintenance-free ball bearings

噪音等级 Sound Pressure Level	风量 Air Flow	风压 Air pressure		速度控制 Speed Control	接线图 Wiring Mode
dB(A)	m³/h	Pa	with support bracket		
70	645	720	FK3G190-2APY-70	0-10VDC PWM	F1
70	645	720	FK3G190-2APY-76		F1
72	790	685	FK3G190-2APY-71		F1
74	785	890	FK3G190-2APS-90		F2

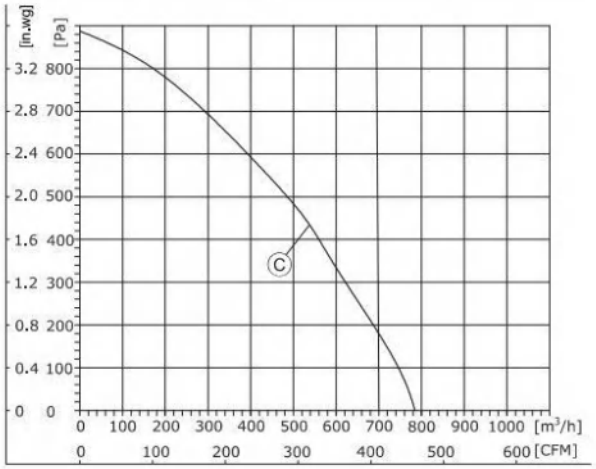

1、Air performance measured according to: ISO 5801, with DJ inlet ring without contact protection.
2、Intake-side sound level: LpA measured at 1 m distance from fan axis. The values given are only applicable under the specifi ed measuring conditions and may differ depending on the installation conditions.

(后向离心风机Centrifugal Fan)
FB3G190-2APY-70

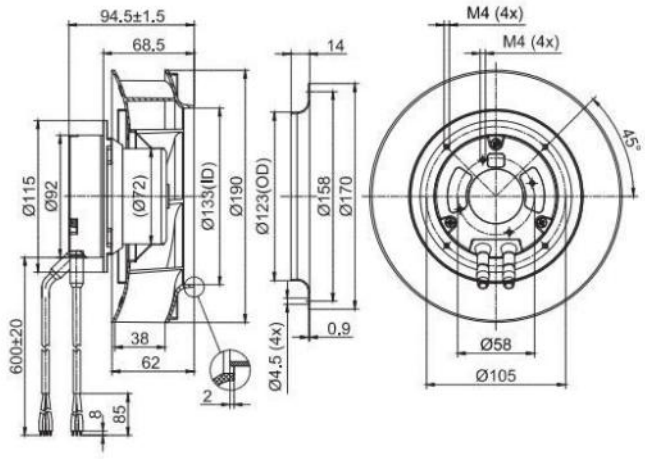

(后向离心风机Centrifugal Fan)
FB3G190-2APY-76

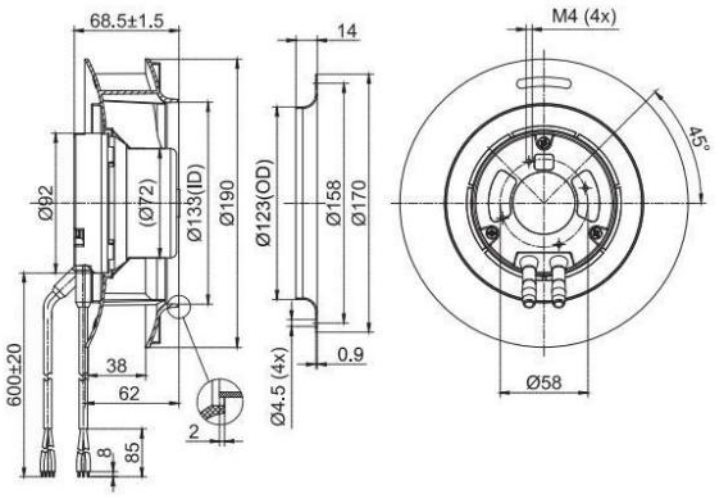

(支架离心风机Centrifugal Fan With Support Bracket)
FK3G190-2APY-70

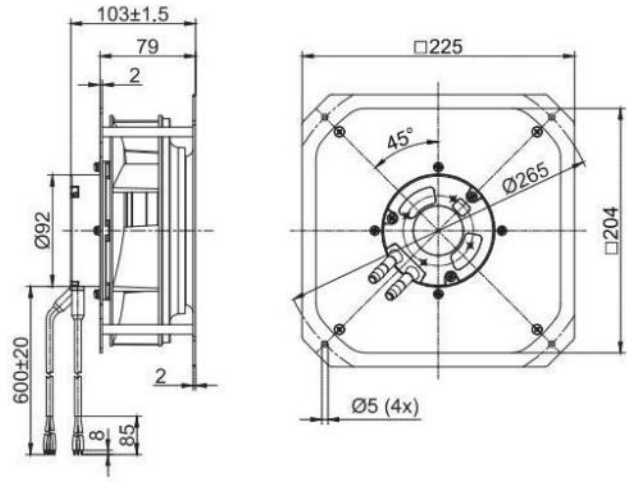

(支架离心风机Centrifugal Fan With Support Bracket)
FK3G190-2APY-76

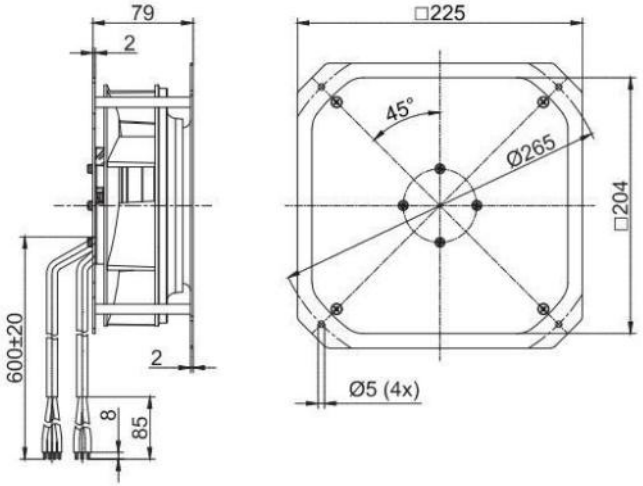

(后向离心风机Centrifugal Fan)
FB3G190-2APY-71

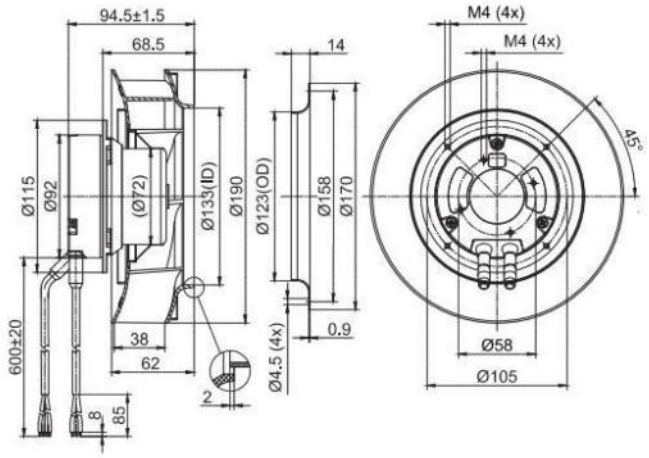

(后向离心风机Centrifugal Fan)
FB3G190-2APS-90

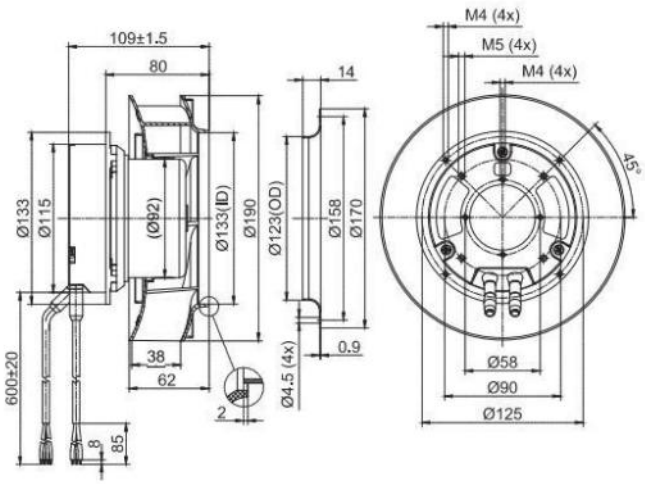

(支架离心风机Centrifugal Fan With Support Bracket)
FK3G190-2APY-71

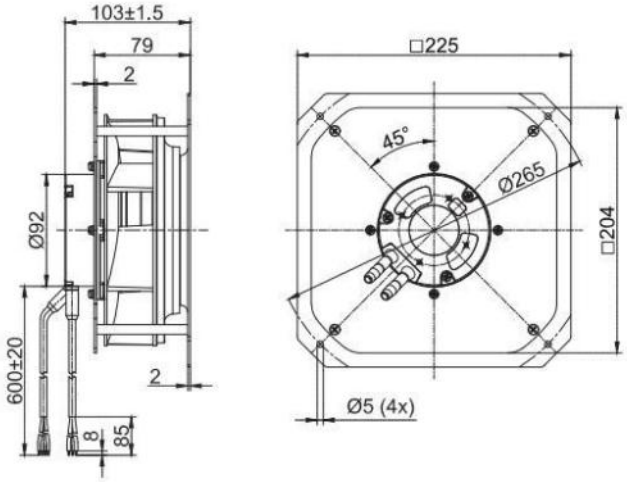

(支架离心风机Centrifugal Fan With Support Bracket)
FK3G190-2APS-90

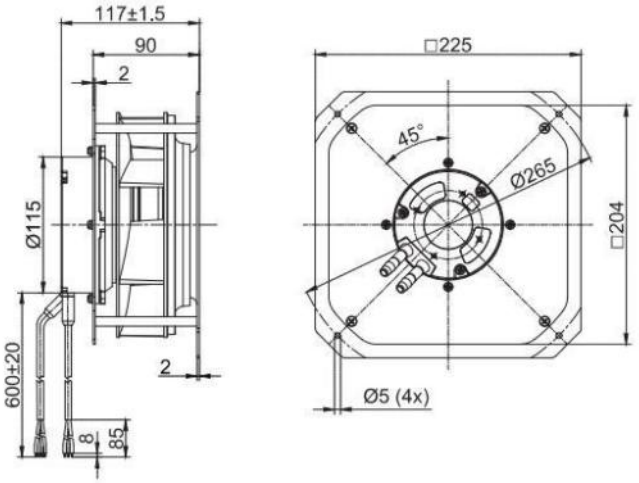



EC Backward Centrifugal Fans D220

- 材料**Material:** 塑料风轮Impeller: Plastic
  转子 Rotor: 电泳Electrophoresis
  端盖 Electronics housing: 压铸铝Die-cast aluminium
- 叶片数量**Number of blades:** 7
- 防护等级**Degree of protection:** IP 44
- 绝缘等级**Insulation class:** B
- 安装位置**Installation position:** 任意Any
- 模式**Mode:**连续工作制 Continuous operation (S1)

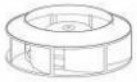	电机 Motor	曲线 Curve	额定电压 Nominal Voltage	额定电压范围 Nominal Voltage Range	频率 Frequency	电流 Current	转速 Speed	输入功率 Max. input Power
Type			VAC	VAC	Hz	A	RPM	W
FB3G220-2APY-70	BLEC72	Ⓐ	230	184~270	50/60	0.8	3050	95
FB3G220-2APY-90	BLEC92	Ⓑ	230	184~270	50/60	1.2	3600	170

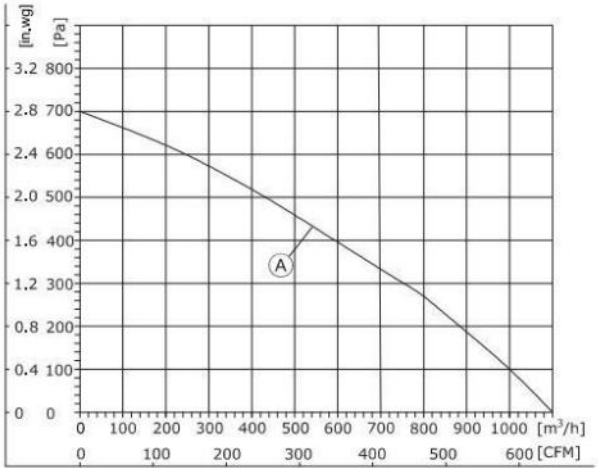

1、Air performance measured according to: ISO 5801, with DJ inlet ring without contact protection.
2、Intake-side sound level: LpA measured at 1 m distance from fan axis. The values given are only applicable under the specifi ed measuring conditions and may differ depending on the installation conditions.

EC Centrifugal Fan

EC Backward Centrifugal Fans D220

- 旋转方向**Direction of rotation:** 正转，从转子方向Clockwise，viewed toward rotor
- 技术特性**Technical features:** 参见附图See connection diagram
- 泄漏电流**Touch curren:** < 3,5 mA
- 能效**Efficiency:** ErP2015
- 标准/证书**Valid For Approval/Standard:** CE,RoHS,ISO9001
  环境温度**Perm. ambient temp.:** -25℃~+60℃
- 安装**Mounting:** 免维护滚珠轴承Maintenance-free ball bearings

噪音等级 Sound Pressure Level	风量 Air Flow	风压 Air Pressure		速度控制 Speed Control	接线图 Wiring Mode
dB(A)	m³/h	Pa	with support bracket		
71	1100	700	FK3G220-2APY-70	0-10VDC PWM Modbus485	F1
74	1100	840	FK3G220-2APY-90		F2

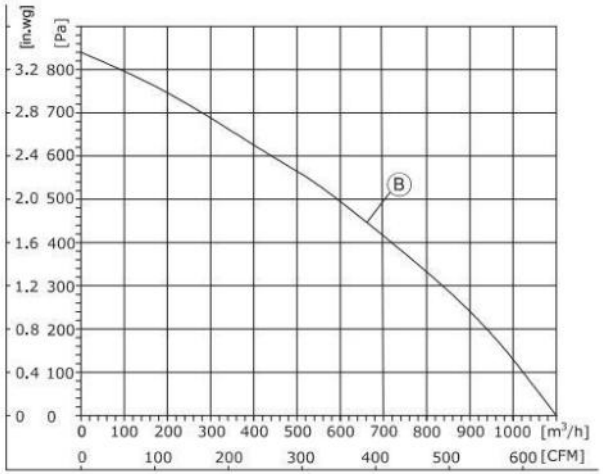

1、Air performance measured according to: ISO 5801, with DJ inlet ring without contact protection.
2、Intake-side sound level: LpA measured at 1 m distance from fan axis. The values given are only applicable under the specifi ed measuring conditions and may differ depending on the installation conditions.

(后向离心风机Centrifugal Fan)
FB3G220-2APY-70

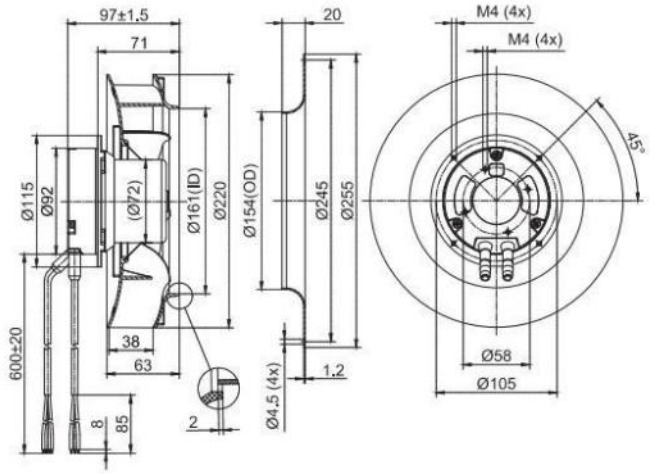

(后向离心风机Centrifugal Fan)
FB3G220-2APY-90

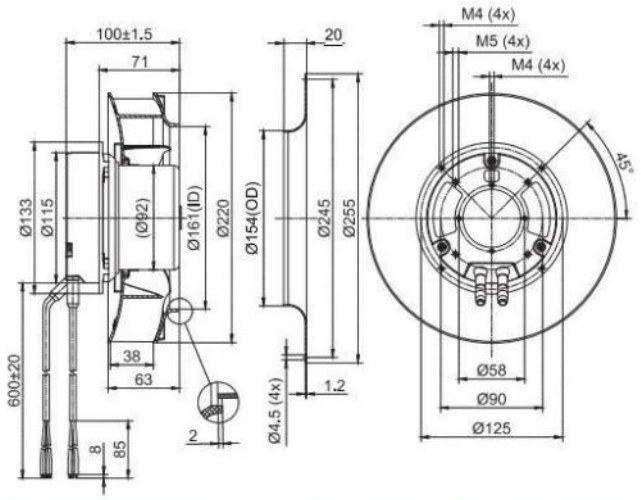

(支架离心风机Centrifugal Fan With Support Bracket)
FK3G220-2APL-70

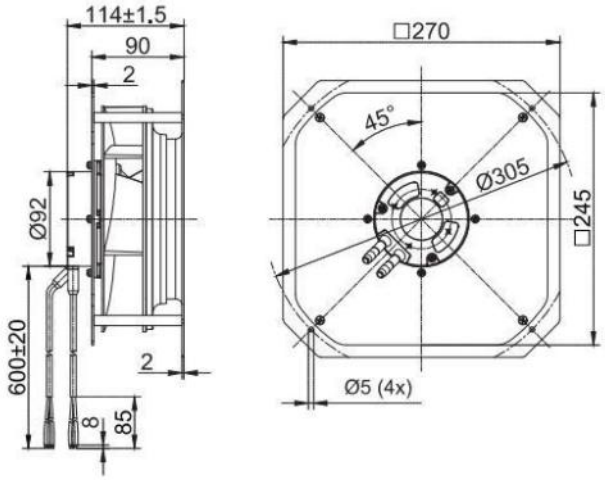

(支架离心风机Centrifugal Fan With Support Bracket)
FK3G220-2APY-90

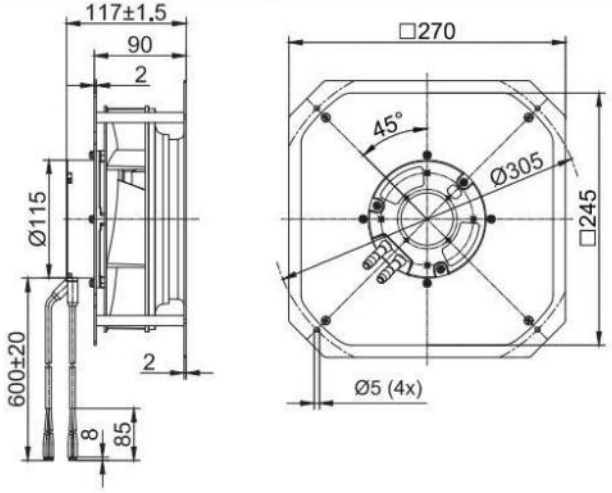



EC Backward Centrifugal Fans D225

- 材料**Material:** 塑料风轮Impeller: Plastic
  转子 Rotor: 电泳Electrophoresis
  端盖 Electronics housing: 压铸铝Die-cast aluminium
- 叶片数量**Number of blades:** 7
- 防护等级**Degree of protection:** IP 44
- 绝缘等级**Insulation class:** B
- 安装位置**Installation position:**任意 Any
- 模式**Mode:**连续工作制 Continuous operation (S1)

	电机 Motor	曲线 Curve	额定电压 Nominal Voltage	额定电压范围 Nominal Voltage Range	频率 Frequency	电流 Current	转速 Speed	输入功率 Max. input Power
Type			VAC	VAC	Hz	A	RPM	W
FB3G225-2APY-70	BLEC72	Ⓐ	230	184~270	50/60	0.72	2500	120
FB3G225-2APY-90	BLEC92	Ⓑ	230	184~270	50/60	0.95	2700	150
FB3G225-2APY-96	BLEC92	Ⓒ	230	184~270	50/60	1.6	3400	220

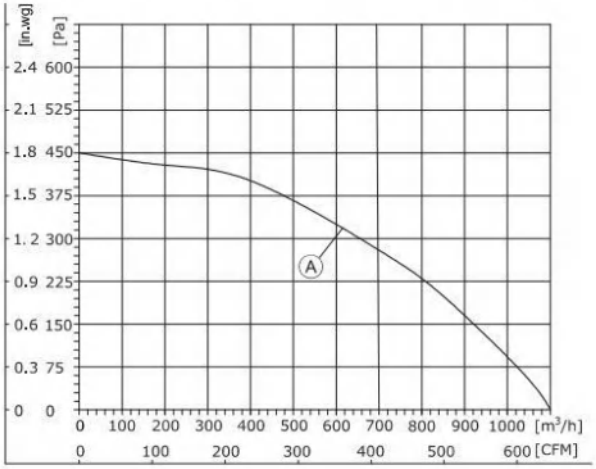

1、Air performance measured according to: ISO 5801, with DJ inlet ring without contact protection.
2、Intake-side sound level: LpA measured at 1 m distance from fan axis. The values given are only applicable under the specifi ed measuring conditions and may differ depending on the installation conditions.

EC Backward Centrifugal Fans D225

- 旋转方向**Direction of rotation:** 正转，从转子方向Clockwise，viewed toward rotor
- 技术特性**Technical features:** 参见附图See connection diagram
- 泄漏电流**Touch curren:** < 3,5 mA
- 能效**Efficiency:** ErP2015
- 标准/证书**Valid For Approval/Standard:** CE,RoHS,ISO9001
  环境温度**Perm. ambient temp.:** -25℃~+60℃
- 安装**Mounting:** 免维护滚珠轴承Maintenance-free ball bearings

噪音等级 Sound pressure level	风量 Air Flow	风压 Air pressure	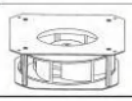	速度控制 Speed Control	接线图 Wiring Mode
dB(A)	m³/h	Pa	with support bracket		
71	1098	447	FK3G225-2APY-70	0-10VDC PWM Modbus485	F1
73	1202	514	FK3G225-2APY-90		F2
74	1350	900	FK3G225-2APY-96		F2

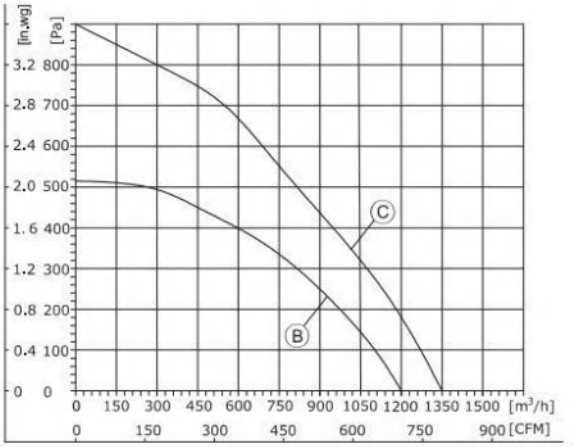

1、Air performance measured according to: ISO 5801, with DJ inlet ring without contact protection.
2、Intake-side sound level: LpA measured at 1 m distance from fan axis. The values given are only applicable under the specifi ed measuring conditions and may differ depending on the installation conditions.

(后向离心风机Centrifugal Fan)
FB3G225-2APY-70

EC Centrifugal Fan

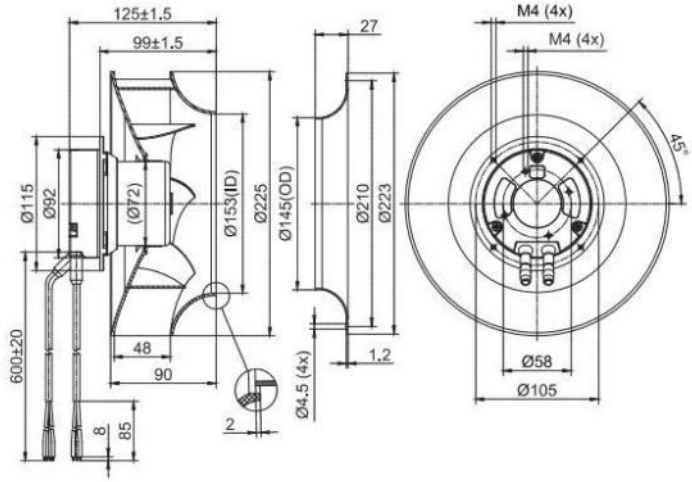

(后向离心风机Centrifugal Fan)
FB3G225-2APY-90

EC Centrifugal Fan

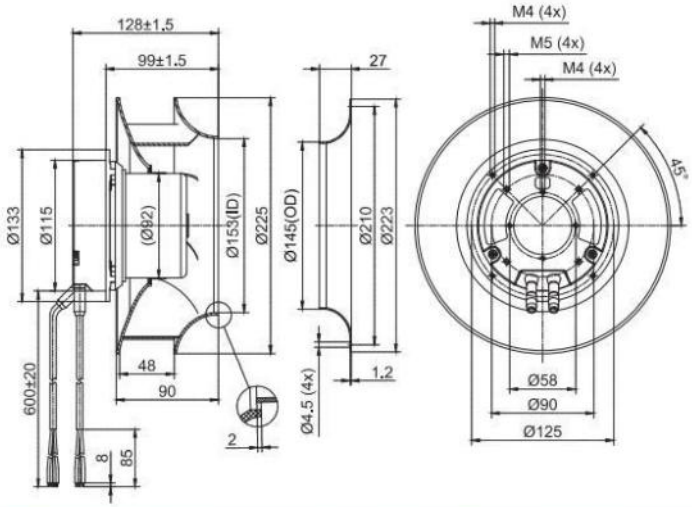

(支架离心风机Centrifugal Fan With Support Bracket)
FK3G225-2APY-70

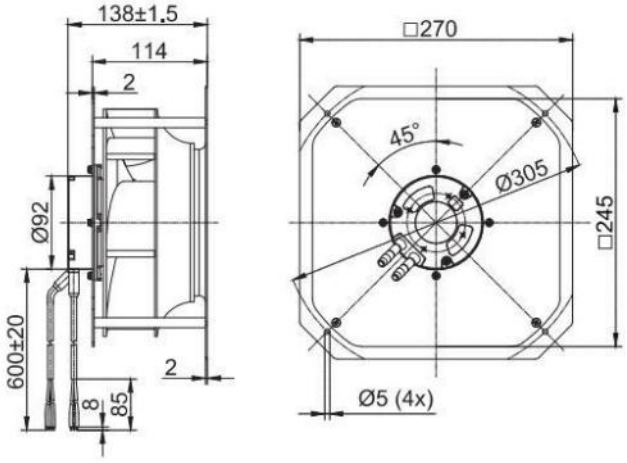

(支架离心风机Centrifugal Fan With Support Bracket)
FK3G225-2APY-90

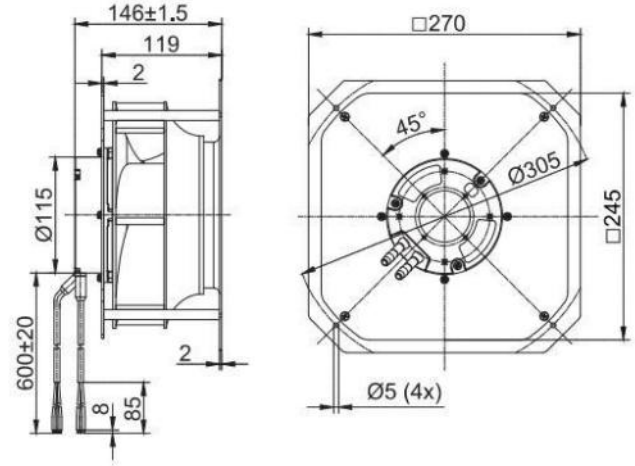

(后向离心风机Centrifugal Fan)
FB3G225-2APY-96

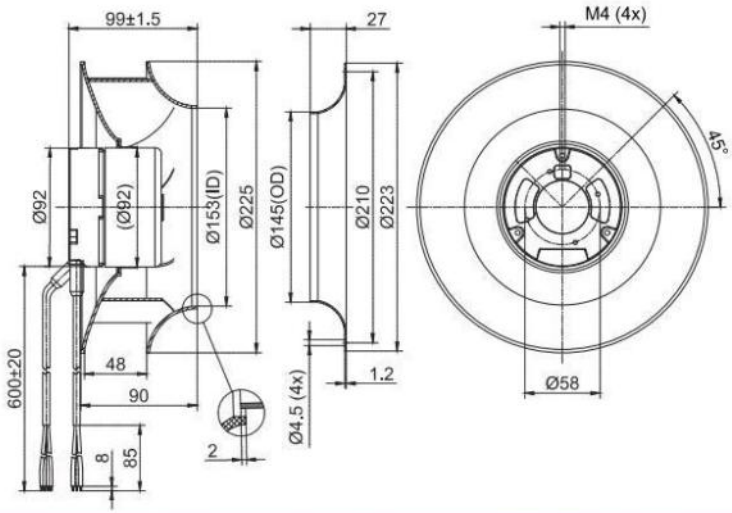

(支架离心风机Centrifugal Fan With Support Bracket)
FK3G225-2APY-96

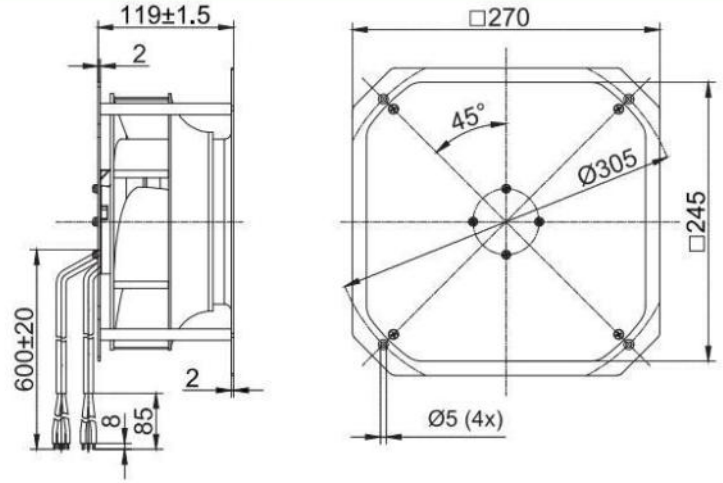

EC Centrifugal Fans



EC Backward Centrifugal Fans D250

- 材料**Material:** 塑料/铝合金/镀锌钢板
  风轮**Impeller:** Plastic/Aluminium alloy/Galvanized steel plate
  转子 Rotor: 电泳Electrophoresis
  端盖 Electronics housing: 压铸铝Die-cast aluminium
- 叶片数量**Number of blades:** 7/8/11
- 防护等级**Degree of protection:** IP 44/45
- 绝缘等级**Insulation class:** B/F
- 安装位置**Installation position:**任意 Any
- 模式**Mode:**连续工作制 Continuous operation (S1)

	电机 Motor	曲线 Curve	额定电压 Nominal voltage	额定电压范围 Nominal Voltage Range	频率 Frequency	电流 Current	转速 Speed	输入功率 Max. input Power
Type			VAC	VAC	HZ	A	RPM	W
FB3G250-2AGL-90	BLEC92	Ⓐ	230	184~270	50/60	1.1	2750	150
FB3G250-2APS-90	BLEC92	Ⓑ	230	184~270	50/60	1.4	3050	220
FB3G250-2APS-96	BLEC92	Ⓑ	230	184~270	50/60	1.4	3050	220
FB3G250-2APS-20	BLEC102	Ⓒ	230	184~270	50/60	1.6	3550	360
FB3G250-2APS-21	BLEC102	Ⓓ	230	184~270	50/60	2.3	3750	500
FB3G250-2AAY-30	BLEC102	Ⓔ	230	184~270	50/60	3.3	3000	750

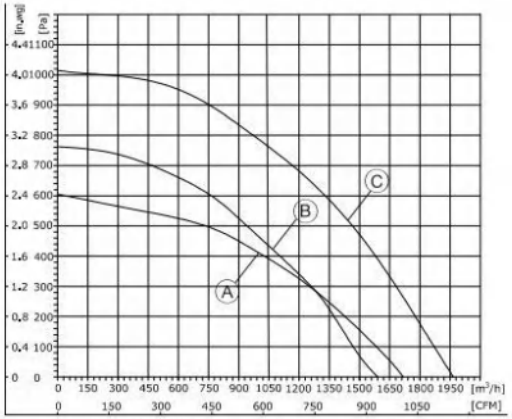

1、Air performance measured according to: ISO 5801, with DJ inlet ring without contact protection.
2、Intake-side sound level: LpA measured at 1 m distance from fan axis. The values given are only applicable under the specifi ed measuring conditions and may differ depending on the installation conditions.

EC Backward Centrifugal Fans D250

- 旋转方向**Direction of rotation:** 正转，从转子方向Clockwise，viewed toward rotor
- 技术特性**Technical features:** 参见附图See connection diagram
- 泄漏电流**Touch curren:** < 3,5 mA
- 能效**Efficiency:** ErP2015
- 标准/证书**Valid For Approval/Standard**：CE,RoHS,ISO9001
  环境温度**Perm. ambient temp.**：-25℃~+60℃
- 安装**Mounting:** 免维护滚珠轴承Maintenance-free ball bearings

噪音等级 Sound Pressure Level	风量 Air Flow	风压 Air Pressure	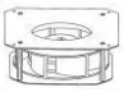	速度控制 Speed Control	接线图 Wiring Mode
dB(A)	m³/h	Pa	with support bracket		
74	1716	605	FK3G250-2AGL-90	0-10VDC PWM Modbus485	F2
77.1	1590	762	FK3G250-2APS-90		F2
77.1	1590	762	FK3G250-2APS-96		F2
82.6	1964	1016	FK3G250-2APS-20		F3,F5
86.2	2200	1520	FK3G250-2APS-21		F3,F5
87	3430	1077	FK3G250-2AAY-30		F7

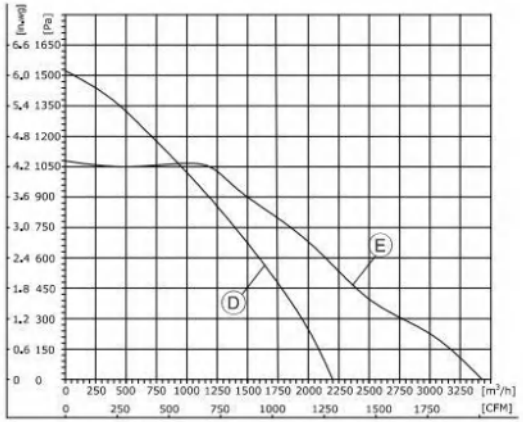

1、Air performance measured according to: ISO 5801, with DJ inlet ring without contact protection.
2、Intake-side sound level: LpA measured at 1 m distance from fan axis. The values given are only applicable under the specifi ed measuring conditions and may differ depending on the installation conditions.

(后向离心风机Centrifugal Fan)
FB3G250-2AGL-90

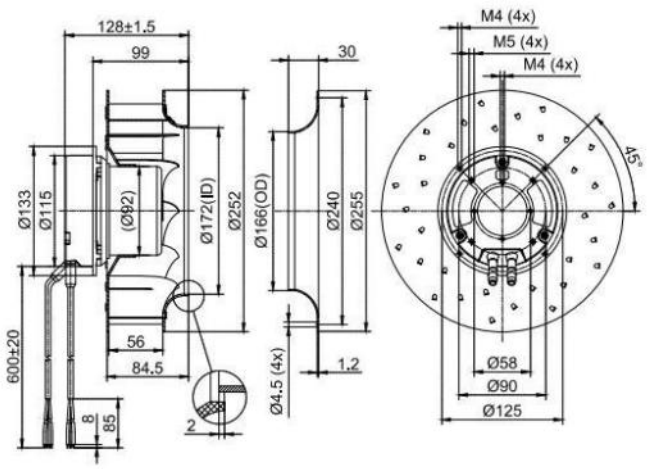

(后向离心风机Centrifugal Fan)
FB3G250-2APS-90

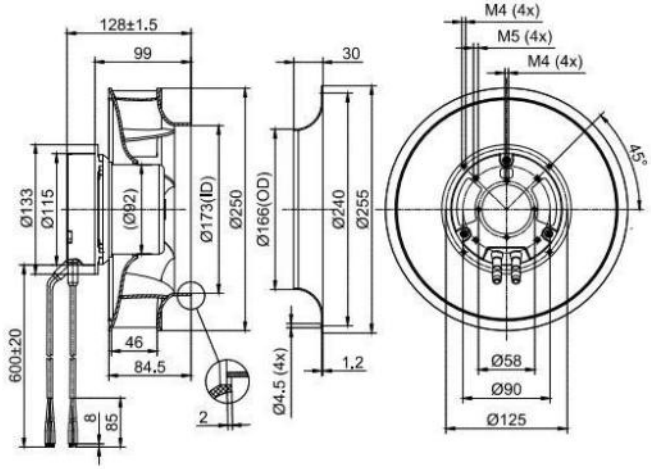

(支架离心风机Centrifugal Fan With Support Bracket)
FK3G250-2AGL-90

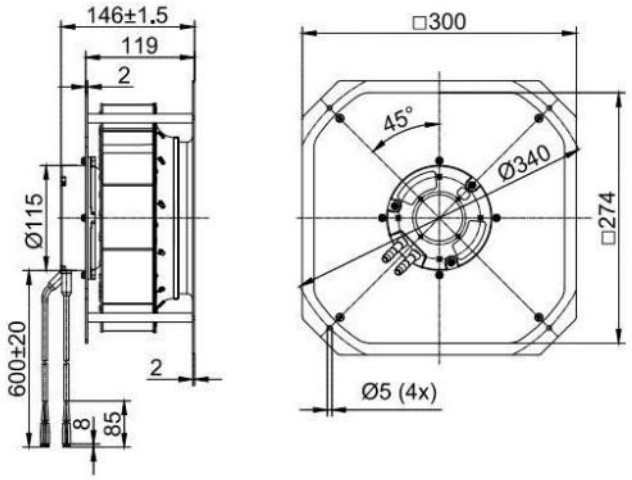

(支架离心风机Centrifugal Fan With Support Bracket)
FK3G250-2APS-90

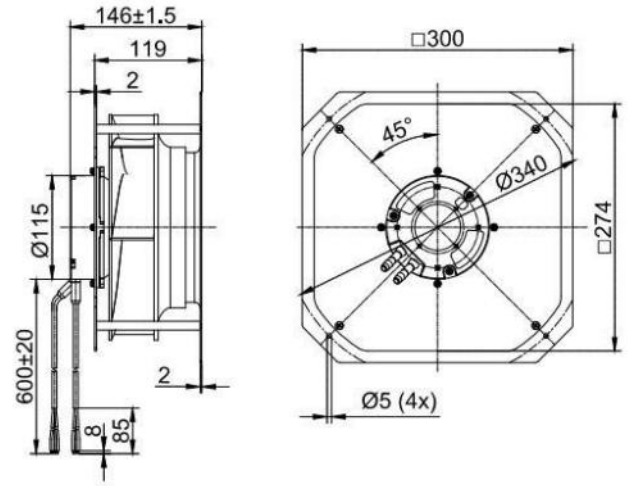

(后向离心风机Centrifugal Fan)
FB3G250-2APS-96

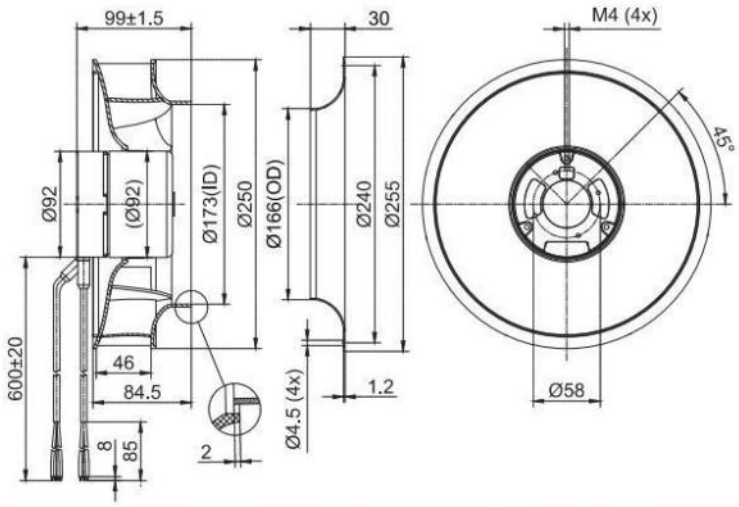

(后向离心风机Centrifugal Fan)
FB3G250-2APS-20

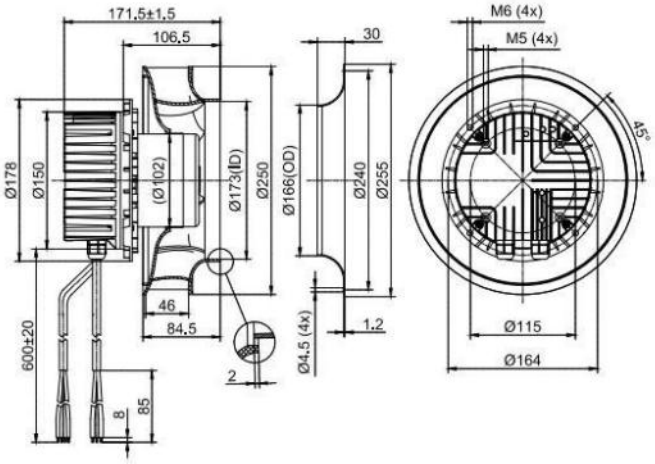

(支架离心风机Centrifugal Fan With Support Bracket)
FK3G250-2APS-96

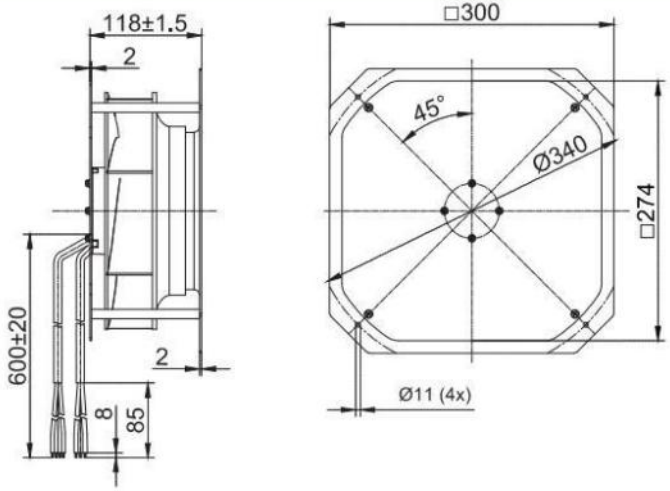

(支架离心风机Centrifugal Fan With Support Bracket)
FK3G250-2APS-20

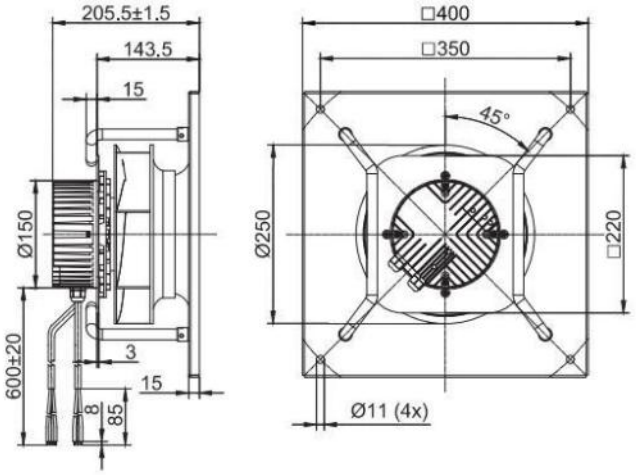

(后向离心风机Centrifugal Fan)
FB3G250-2APS-21

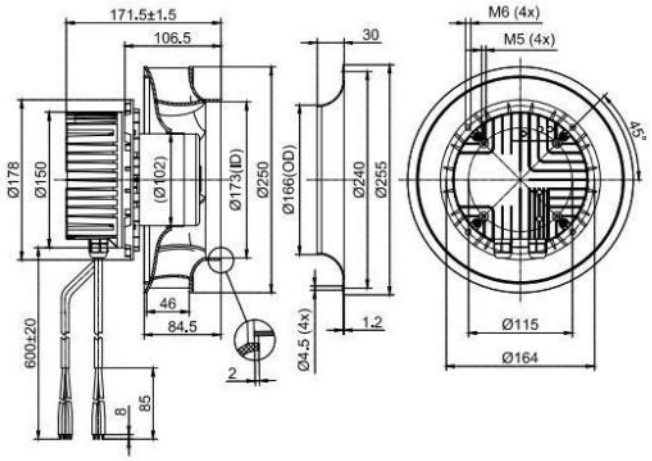

(后向离心风机Centrifugal Fan)
FB3G250-2AAY-30

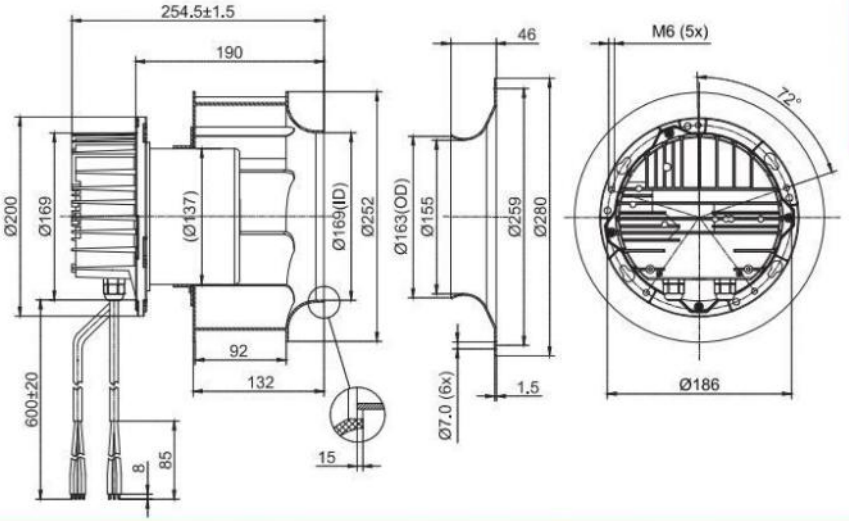

(支架离心风机Centrifugal Fan With Support Bracket)
FK3G250-2APS-21

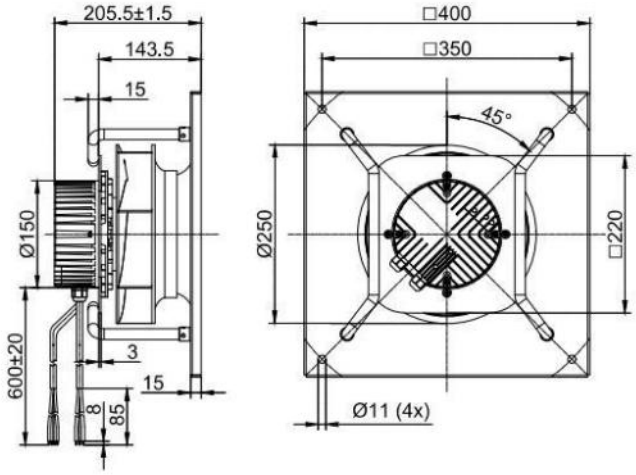

(支架离心风机Centrifugal Fan With Support Bracket)
FK3G250-2AAY-30

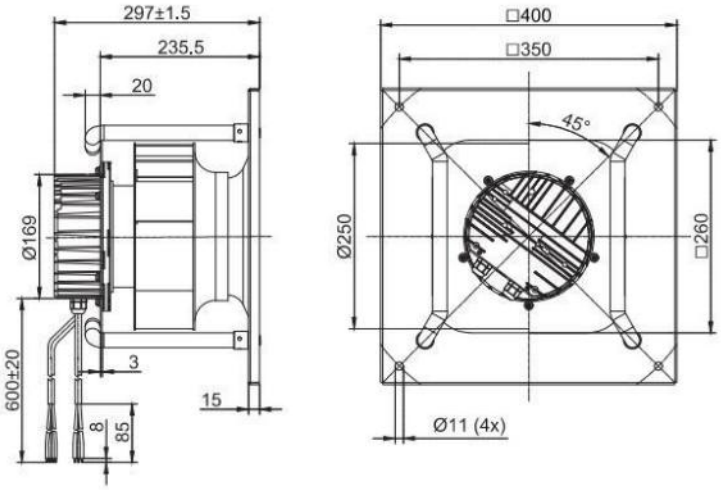

EC Backward Centrifugal Fans D280



- 材料**Material:** 塑料/铝合金/镀锌钢板
  风轮**Impeller:** Plastic/Aluminium alloy/Galvanized steel plate
  转子 Rotor: 电泳Electrophoresis
  端盖 Electronics housing: 压铸铝Die-cast aluminium
- 叶片数量**Number of blades:** 7/8/11
- 防护等级**Degree of protection:** IP 44/54
- 绝缘等级**Insulation class:** B/F
- 安装位置**Installation position:** 任意Any
- 模式**Mode:**连续工作制 Continuous operation (S1)

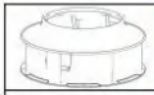	电机 Motor	曲线 Curve	额定电压 Nominal voltage	额定电压范围 Nominal Voltage Range	频率 Frequency	电流 Current	转速 Speed	输入功率 Max. input Power
Type			VAC	VAC	HZ	A	RPM	W
FB3G280-2APL-90	BLEC92	Ⓐ	230	184~270	50/60	1.45	1950	195
FB3G280-2AGY-20	BLEC102	Ⓑ	230	184~270	50/60	1.8	2780	410
FB3G280-2APL-20	BLEC102	Ⓒ	230	184~270	50/60	2.2	2750	500
FB3G280-2APL-21	BLEC102	Ⓓ	230	184~270	50/60	1.6	2500	370
FB3G280-2AAB-67	BLEC102	Ⓔ	230	184~270	50/60	3.1	3270	700
FB3G280-4AAL-30	BLEC137	Ⓕ	380	304~456	50/60	1.9	3500	1100

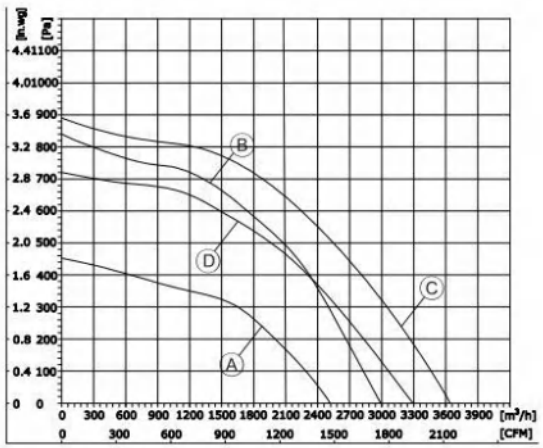

1、Air performance measured according to: ISO 5801, with DJ inlet ring without contact protection.
2、Intake-side sound level: LpA measured at 1 m distance from fan axis. The values given are only applicable under the specifi ed measuring conditions and may differ depending on the installation conditions.

EC Backward Centrifugal Fans D280

- 旋转方向**Direction of rotation:** 正转，从转子方向Clockwise，viewed toward rotor
- 技术特性**Technical features:** 参见附图See connection diagram
- 泄漏电流**Touch curren:** < 3,5 mA
- 能效**Efficiency:** ErP2015
- 标准/证书**Valid For Approval/Standard**：CE,RoHS,ISO9001
  环境温度**Perm. ambient temp.**：-25℃~+60℃
- 安装**Mounting:** 免维护滚珠轴承Maintenance-free ball bearings

噪音等级 Sound Pressure Level	风量 Air Flow	风压 Air Pressure	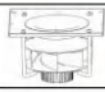	速度控制 Speed Control	接线图 Wiring Mode
dB(A)	m³/h	Pa	with support bracket		
71.5	2517	452	FK3G280-2APL-90	0-10VDC PWM Modbus485	F2
83.6	2943	840	FK3G280-2AGY-20		F3,F5
80.7	3642	891	FK3G280-2APL-20		F3,F5
78	3290	718	FK3G280-2APL-21		F3,F5
85	3780	1100	FK3G280-2AAB-67		F3,F5
88	3650	1280	FK3G280-4AAL-30		F8

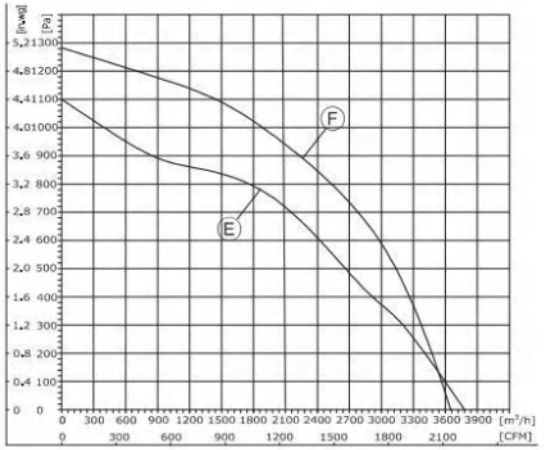

1、Air performance measured according to: ISO 5801, with DJ inlet ring without contact protection.
2、Intake-side sound level: LpA measured at 1 m distance from fan axis. The values given are only applicable under the specifi ed measuring conditions and may differ depending on the installation conditions.

(后向离心风机Centrifugal Fan)
FB3G280-2APL-90

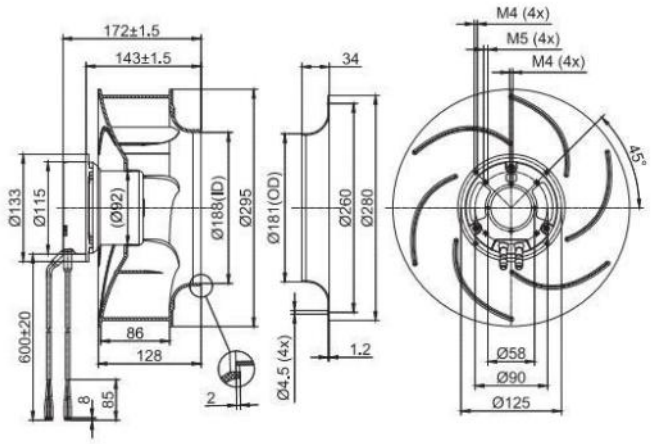

(后向离心风机Centrifugal Fan)
FB3G280-2AGY-20

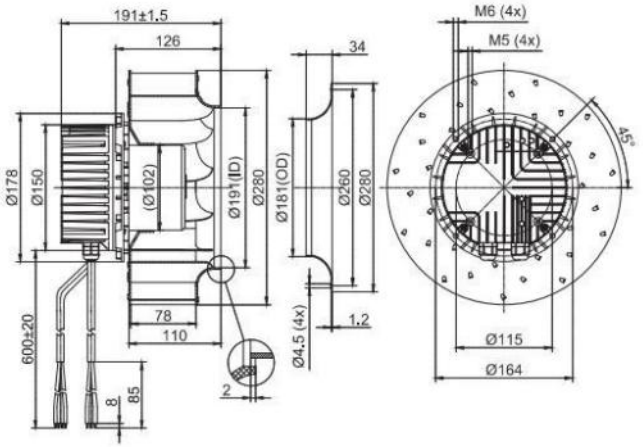

(支架离心风机Centrifugal Fan With Support Bracket)
FK3G280-2APL-90

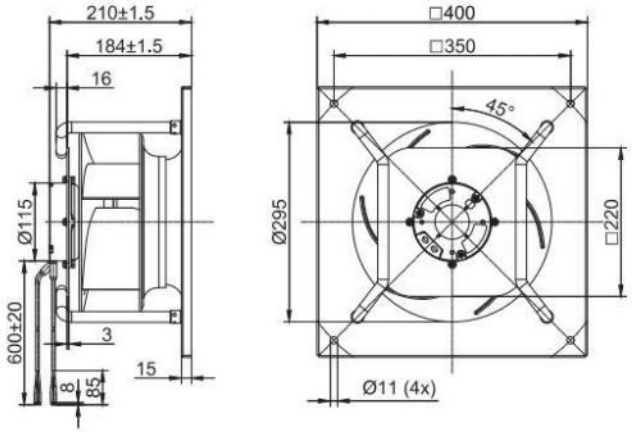

(支架离心风机Centrifugal Fan With Support Bracket)
FK3G280-2AGY-20

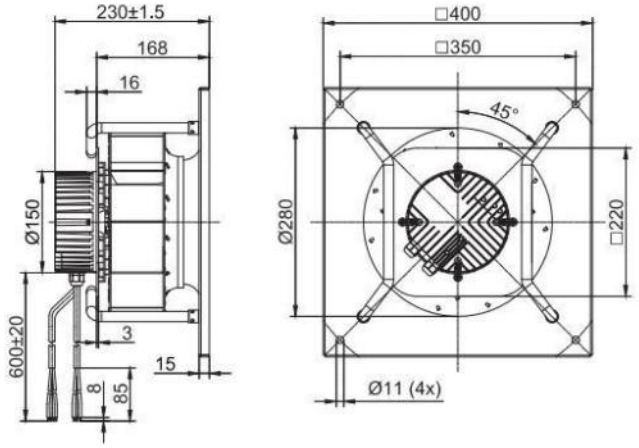

(后向离心风机Centrifugal Fan)
FB3G280-2APL-20

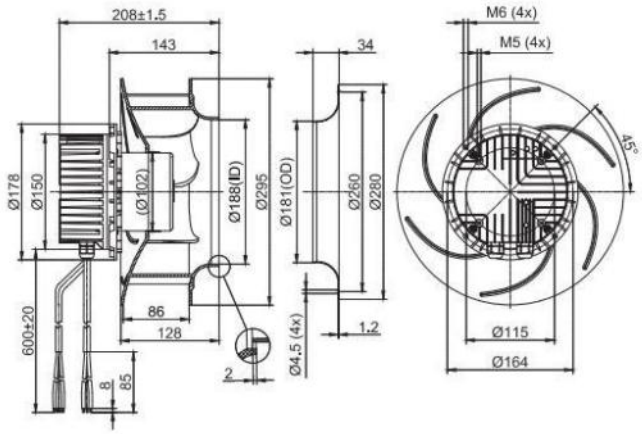

(后向离心风机Centrifugal Fan)
FB3G280-2APL-21

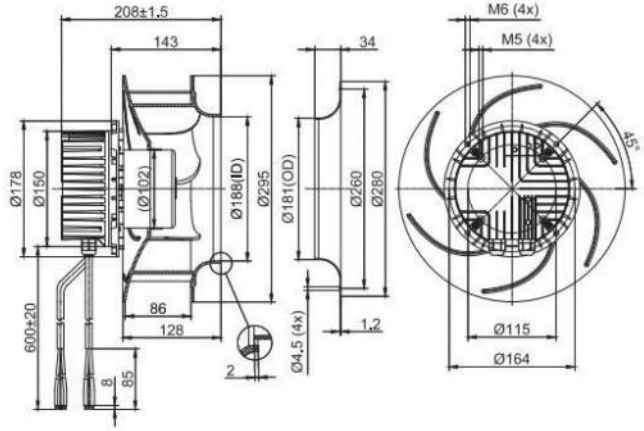

(支架离心风机Centrifugal Fan With Support Bracket)
FK3G280-2APL-20

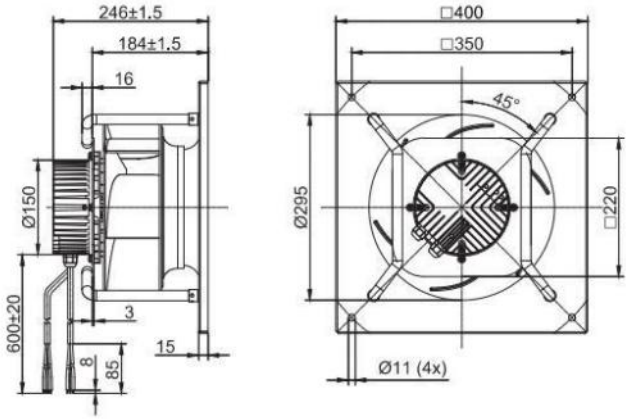

(支架离心风机Centrifugal Fan With Support Bracket)
FK3G280-2APL-21

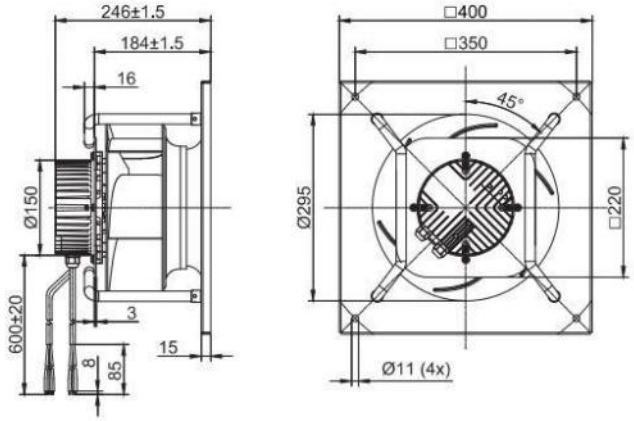

(后向离心风机Centrifugal Fan)
FB3G280-2AAB-67

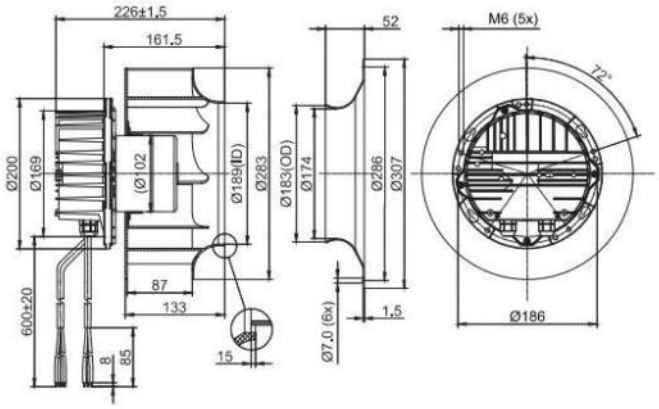

(后向离心风机Centrifugal Fan)
FB3G280-4AAL-30

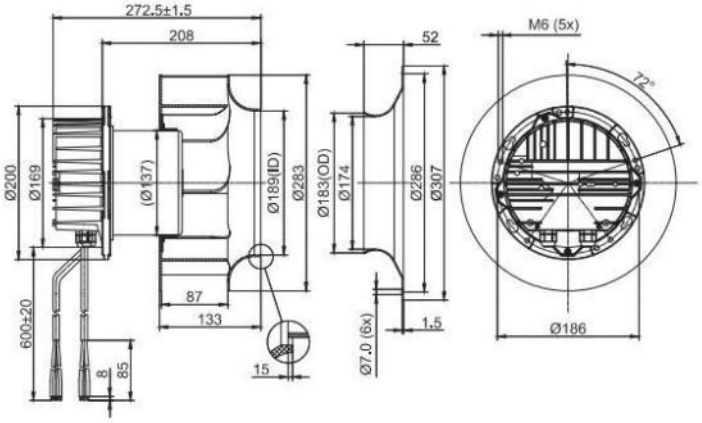

(支架离心风机Centrifugal Fan With Support Bracket)
FK3G280-2AAB-67

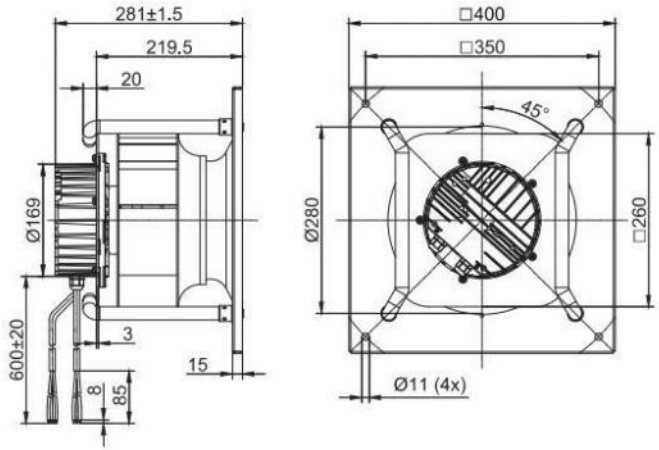

(支架离心风机Centrifugal Fan With Support Bracket)
FK3G280-4AAL-30

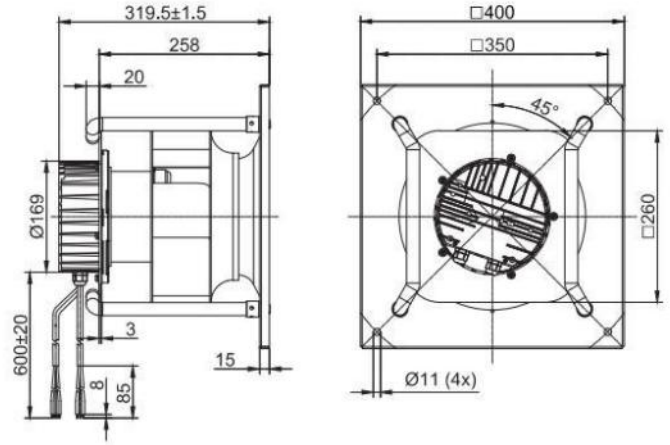

EC Centrifugal Fans



EC Backward Centrifugal Fans D310

- 材料**Material:** 塑料/铝合金
  风轮**Impeller:** Plastic/Aluminium alloy
  转子 Rotor: 电泳Electrophoresis
  端盖 Electronics housing: 压铸铝Die-cast aluminium
- 叶片数量**Number of blades:** 6/7/8
- 防护等级**Degree of protection:** IP 44/54
- 绝缘等级**Insulation class:** B
- 安装位置**Installation position:** 任意Any
- 模式**Mode:**连续工作制 Continuous operation (S1)

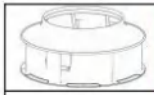	电机 Motor	曲线 Curve	额定电压 Nominal voltage	额定电压范围 Nominal Voltage Range	频率 Frequency	电流 Current	转速 Speed	输入功率 Max. input Power
Type			VAC	VAC	HZ	A	RPM	W
FB3G310-2AAL-90	BLEC92	Ⓐ	230	184~270	50/60	1.2	2000	165
FB3G310-2AAY-90	BLEC92	Ⓑ	230	184~270	50/60	1.3	1750	210
FB3G310-2AAL-20	BLEC102	Ⓒ	230	184~270	50/60	1.75	2650	396
FB3G310-2AAY-20	BLEC102	Ⓓ	230	184~270	50/60	1.5	2300	350
FB3G310-2AAB-67	BLEC102	Ⓔ	230	184~270	50/60	3.1	2960	700
FB3G310-2APK-20	BLEC102	Ⓕ	230	184~270	50/60	2.2	2360	500
FB3G310-2APK-60	BLEC102	Ⓖ	230	184~270	50/60	3.25	2640	740
FB3G310-4APK-60	BLEC102	Ⓗ	380	304~456	50/60	1.25	2700	790

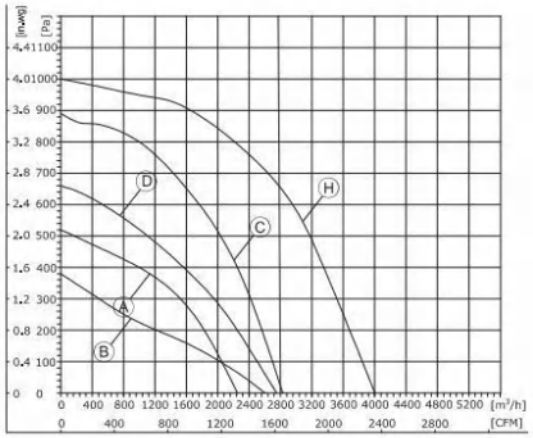

1、Air performance measured according to: ISO 5801, with DJ inlet ring without contact protection.
2、Intake-side sound level: LpA measured at 1 m distance from fan axis. The values given are only applicable under the specifi ed measuring conditions and may differ depending on the installation conditions.

EC Backward Centrifugal Fans D310

- 旋转方向**Direction of rotation:** 正转，从转子方向Clockwise，viewed toward rotor
- 技术特性**Technical features:** 参见附图See connection diagram
- 泄漏电流**Touch curren:** < 3,5 mA
- 能效**Efficiency:** ErP2015
- 标准/证书**Valid For Approval/Standard**：CE,RoHS,ISO9001
  环境温度**Perm. ambient temp.**：-25℃~+60℃
- 安装**Mounting:** 免维护滚珠轴承Maintenance-free ball bearings

噪音等级 Sound Pressure Level	风量 Air Flow	风压 Air Pressure	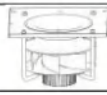	速度控制 Speed Control	接线图 Wiring Mode
dB(A)	m³/h	Pa	with support bracket		
67.7	2250	520	FK3G310-2AAL-90	0-10VDC PWM Modbus485	F2
64	2600	380	FK3G310-2AAY-90		F2
80.4	2826	888	FK3G310-2AAL-20		F3,F5
73	2750	660	FK3G310-2AAY-20		F3,F5
85	4000	1060	FK3G310-2AAB-67		F3,F5
81	3721	950	FK3G310-2APK-20		F3,F5
84	4000	1000	FK3G310-2APK-60		F3,F5
84	4000	1000	FK3G310-4APK-60		F8

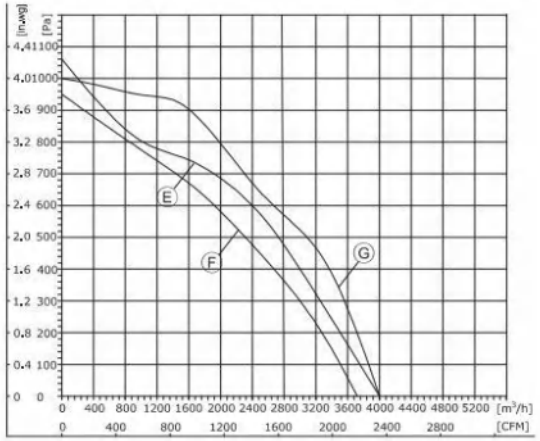

1、Air performance measured according to: ISO 5801, with DJ inlet ring without contact protection.
2、Intake-side sound level: LpA measured at 1 m distance from fan axis. The values given are only applicable under the specifi ed measuring conditions and may differ depending on the installation conditions.

(后向离心风机Centrifugal Fan)
FB3G310-2AAL-90

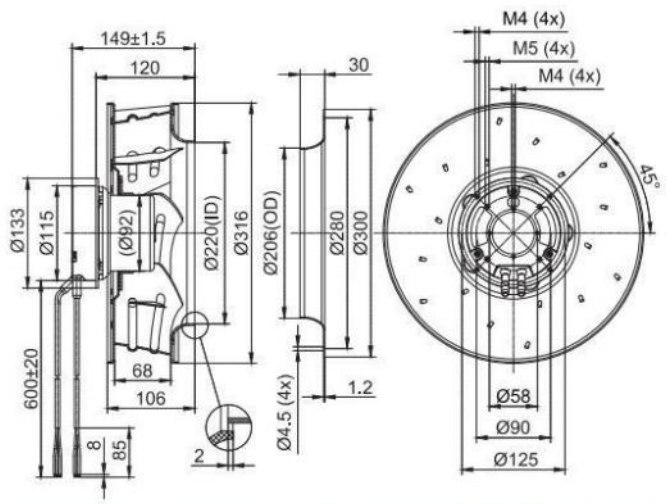

(后向离心风机Centrifugal Fan)
FB3G310-2AAY-90

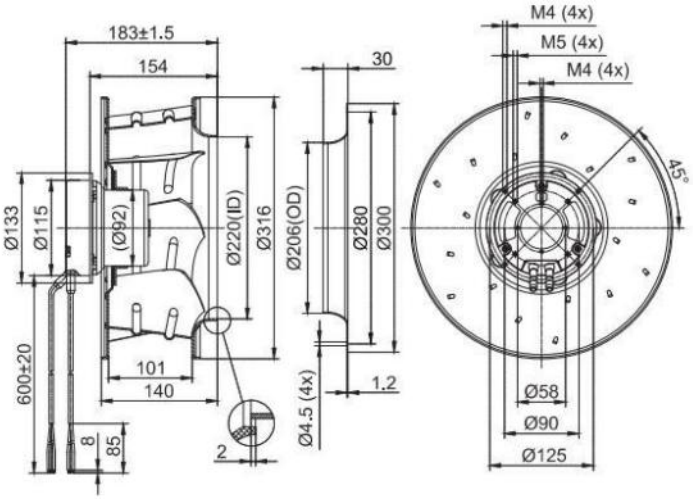

(支架离心风机Centrifugal Fan With Support Bracket)
FK3G310-2AAL-90

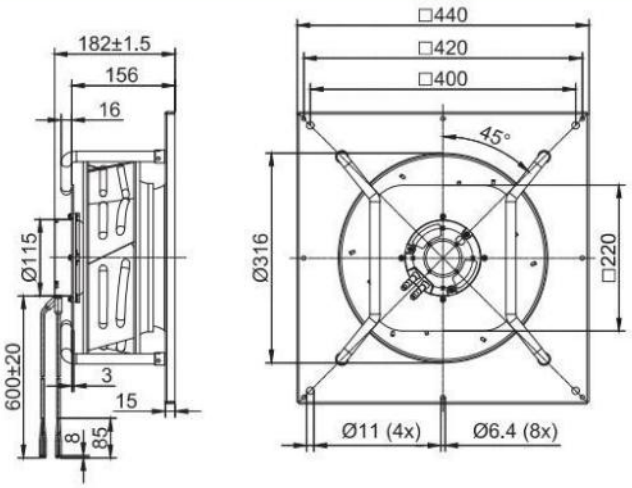

(支架离心风机Centrifugal Fan With Support Bracket)
FK3G310-2AAY-90

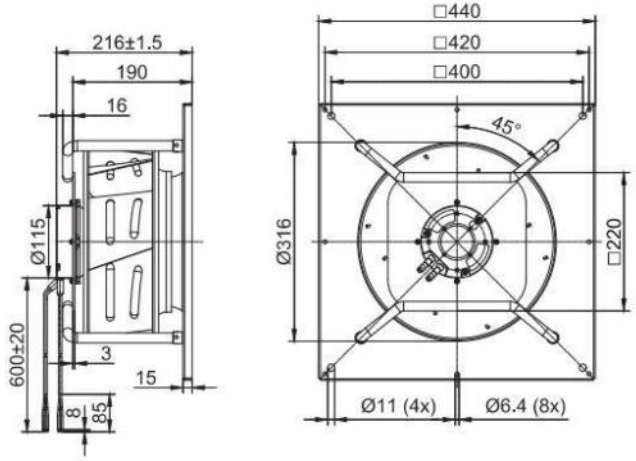

(后向离心风机Centrifugal Fan)
FB3G310-2AAL-20

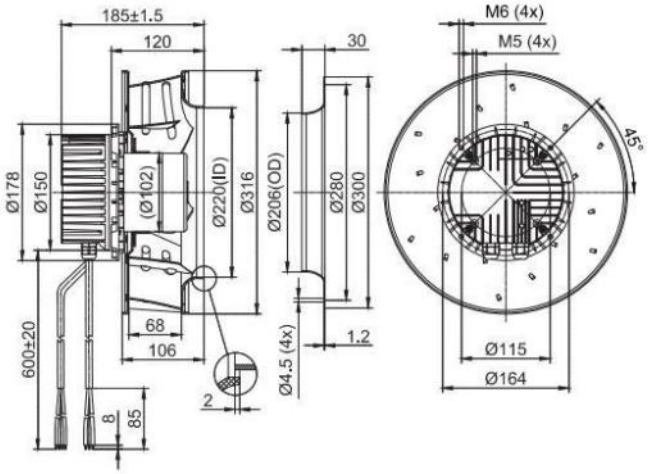

(后向离心风机Centrifugal Fan)
FB3G310-2AAY-20

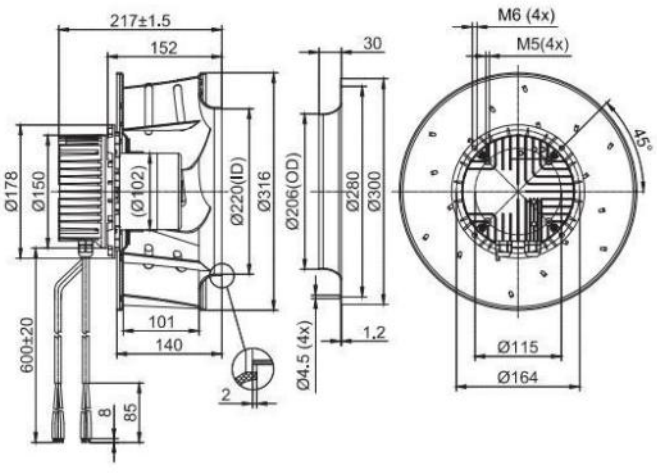

(支架离心风机Centrifugal Fan With Support Bracket)
FK3G310-2AAL-20

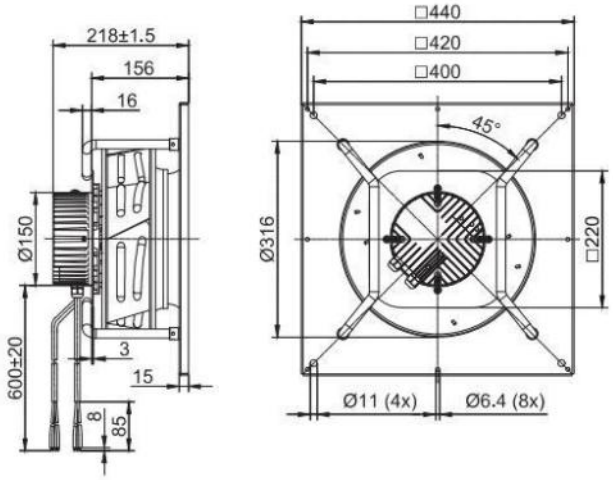

(支架离心风机Centrifugal Fan With Support Bracket)
FK3G310-2AAY-20

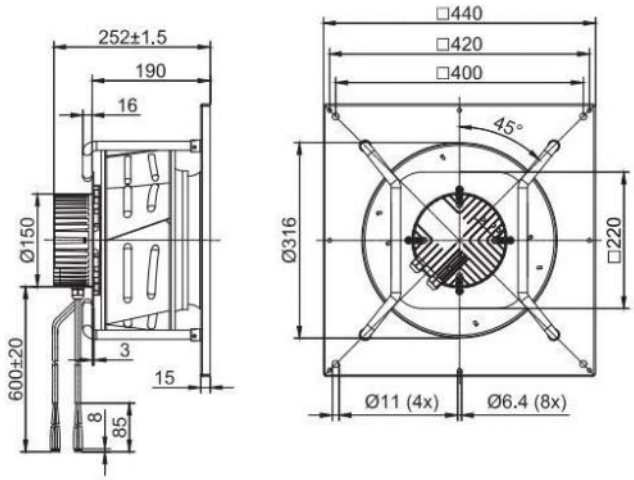

(后向离心风机Centrifugal Fan)
FB3G310-2AAB-67

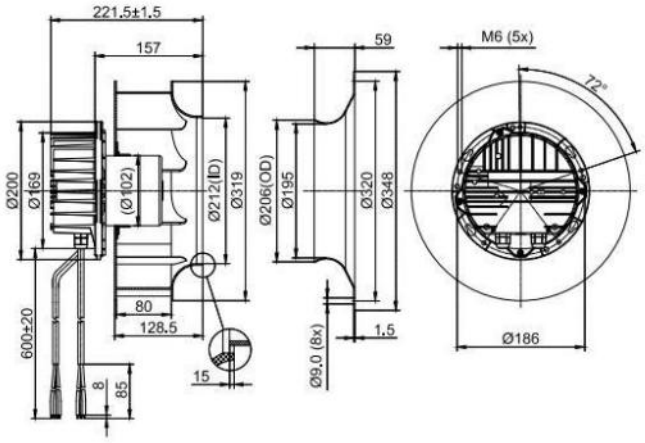

(后向离心风机Centrifugal Fan)
FB3G310-2APK-20

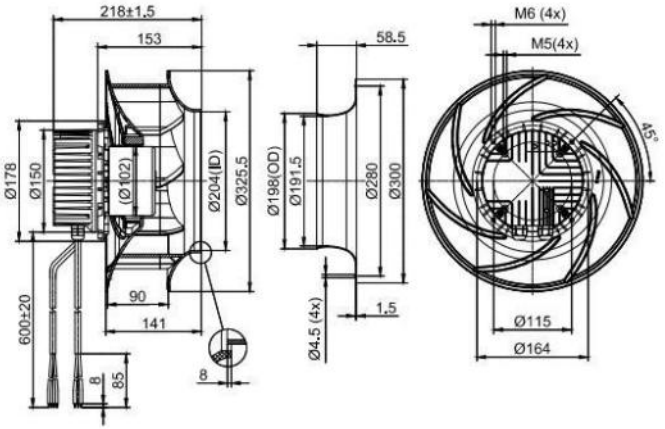

(支架离心风机Centrifugal Fan With Support Bracket)
FK3G310-2AAB-67

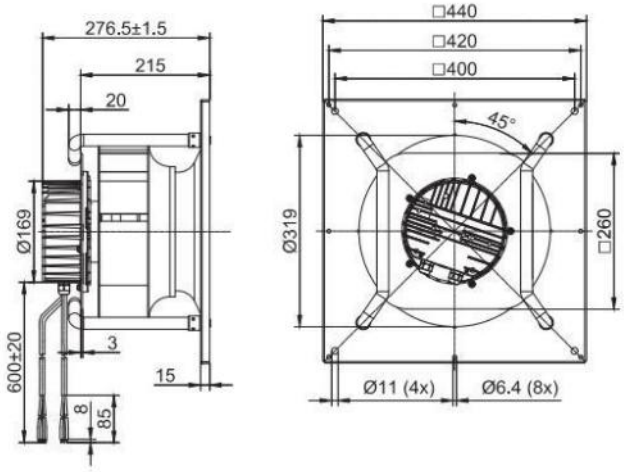

(支架离心风机Centrifugal Fan With Support Bracket)
FK3G310-2APK-20

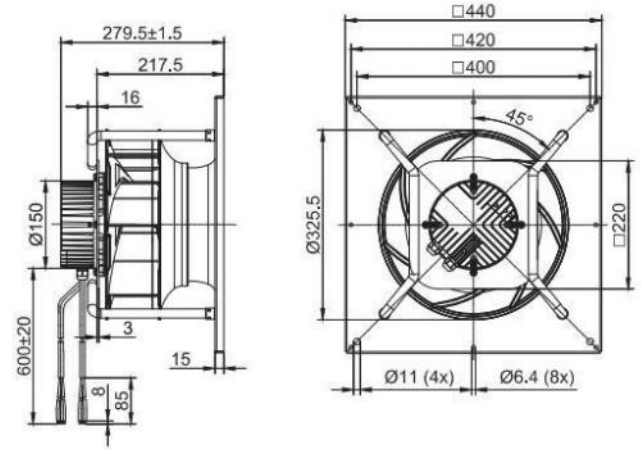

(后向离心风机Centrifugal Fan)
FB3G310-2APK-60

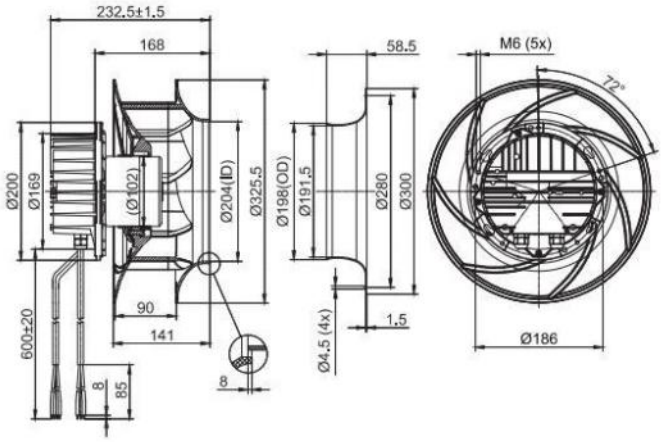

(后向离心风机Centrifugal Fan)
FB3G310-4APK-60

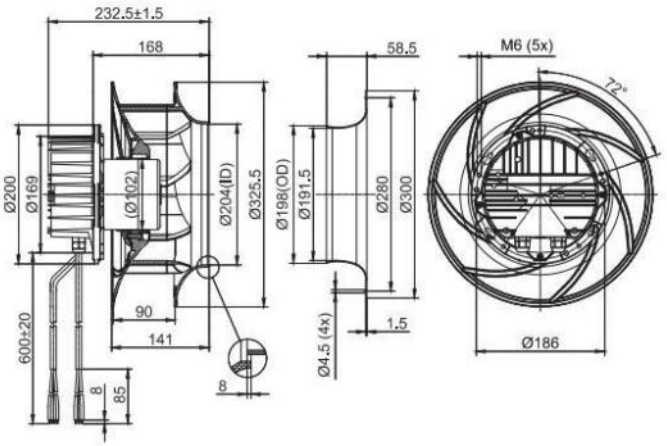

(支架离心风机Centrifugal Fan With Support Bracket)
FK3G310-2APK-60

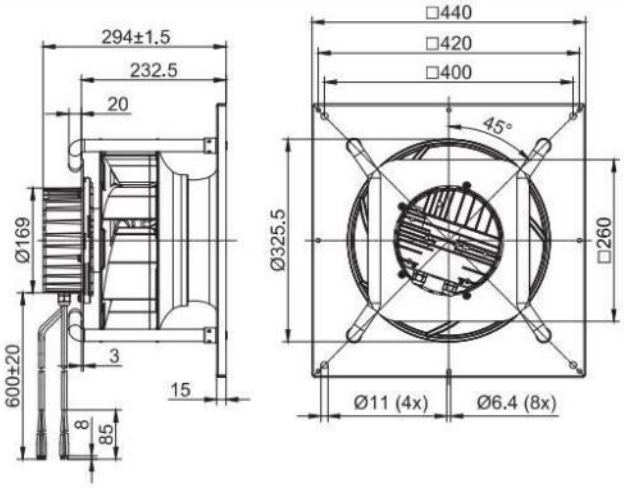

(支架离心风机Centrifugal Fan With Support Bracket)
FK3G310-4APK-60

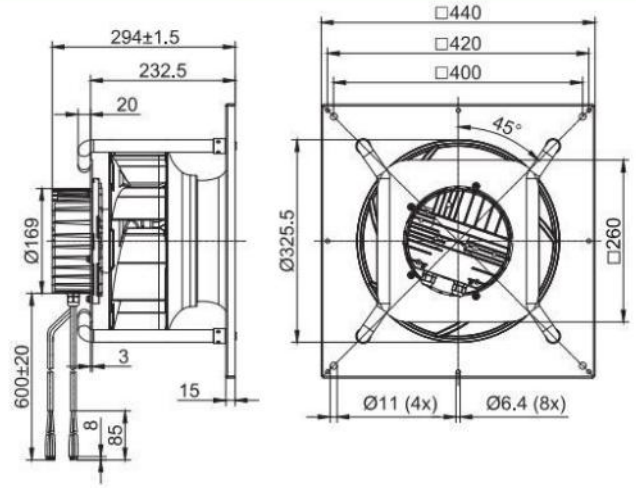



EC Backward Centrifugal Fans D355

- 材料**Material:** 塑料/铝合金
  风轮**Impeller:** Plastic/Aluminium alloy
  转子 Rotor: 电泳Electrophoresis
  端盖 Electronics housing: 压铸铝Die-cast aluminium
- 叶片数量**Number of blades:** 6/7/8
- 防护等级**Degree of protection:** IP 54
- 绝缘等级**Insulation class:** B/F
- 安装位置**Installation position:** 任意Any
- 模式**Mode:**连续工作制 Continuous operation (S1)

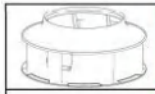	电机 Motor	曲线 Curve	额定电压 Nominal voltage	额定电压范围 Nominal Voltage Range	频率 Frequency	电流 Current	转速 Speed	输入功率 Max. input Power
Type			VAC	VAC	HZ	A	RPM	W
FB3G355-2AAL-20	BLEC102	Ⓐ	230	184~270	50/60	1.75	2050	405
FB3G355-2AAY-20	BLEC102	Ⓑ	230	184~270	50/60	2.0	1920	480
FB3G355-2AAB-67	BLEC102	Ⓒ	230	184~270	50/60	3.1	2200	700
FB3G355-2APK-20	BLEC102	Ⓓ	230	184~270	50/60	2.2	1850	500
FB3G355-2APK-60	BLEC102	Ⓔ	230	184~270	50/60	3.3	2100	750
FB3G355-4APK-30	BLEC137	Ⓕ	380	304~456	50/60	1.8	2400	1140

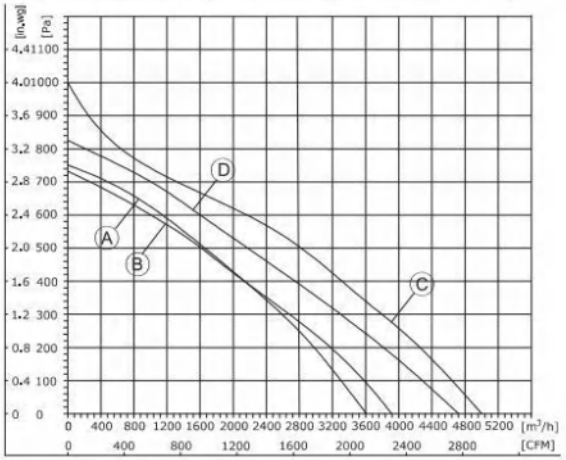

1、Air performance measured according to: ISO 5801, with DJ inlet ring without contact protection.
2、Intake-side sound level: LpA measured at 1 m distance from fan axis. The values given are only applicable under the specifi ed measuring conditions and may differ depending on the installation conditions.

EC Backward Centrifugal Fans D355

- 旋转方向**Direction of rotation:** 正转，从转子方向Clockwise，viewed toward rotor
- 技术特性**Technical features:** 参见附图See connection diagram
- 泄漏电流**Touch curren:** < 3,5 mA
- 能效**Efficiency:** ErP2015
- 标准/证书**Valid For Approval/Standard:** CE,RoHS,ISO9001
  环境温度**Perm. ambient temp.:** -25℃~+60℃
- 安装**Mounting:** 免维护滚珠轴承Maintenance-free ball bearings

EC Centrifugal Fan

噪音等级 Sound Pressure Level	风量 Air Flow	风压 Air Pressure	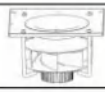	速度控制 Speed Control	接线图 Wiring Mode
dB(A)	m³/h	Pa	with support bracket		
76	3613	750	FK3G280-2APL-90	0-10VDC PWM Modbus485	F3,F5
74	3910	735	FK3G280-2AGY-20		F3,F5
81	4990	1000	FK3G280-2APL-20		F3,F5
84	4720	825	FK3G280-2APL-21		F3,F5
87	5000	1000	FK3G280-2AAB-67		F7
91	5600	1050	FK3G280-4AAL-30		F7

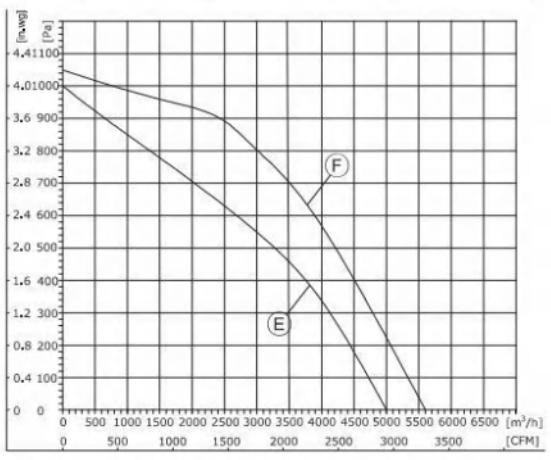

1、Air performance measured according to: ISO 5801, with DJ inlet ring without contact protection.
2、Intake-side sound level: LpA measured at 1 m distance from fan axis. The values given are only applicable under the specifi ed measuring conditions and may differ depending on the installation conditions.

(后向离心风机Centrifugal Fan)
FB3G355-2AAL-20

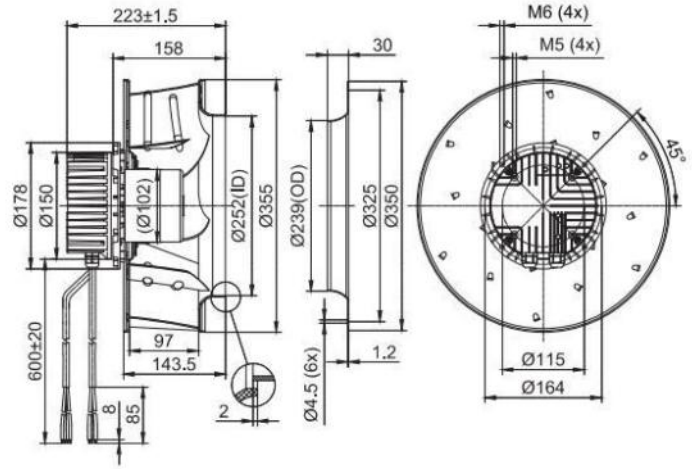

(后向离心风机Centrifugal Fan)
FB3G355-2AAY-20

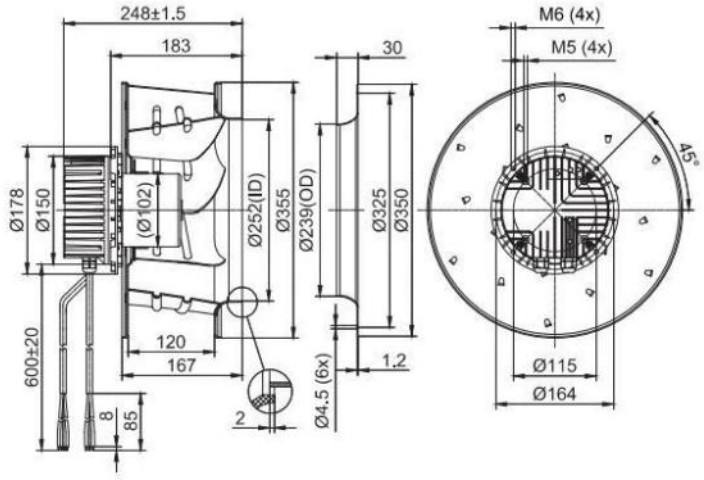

(支架离心风机Centrifugal Fan With Support Bracket)
FK3G355-2AAL-20

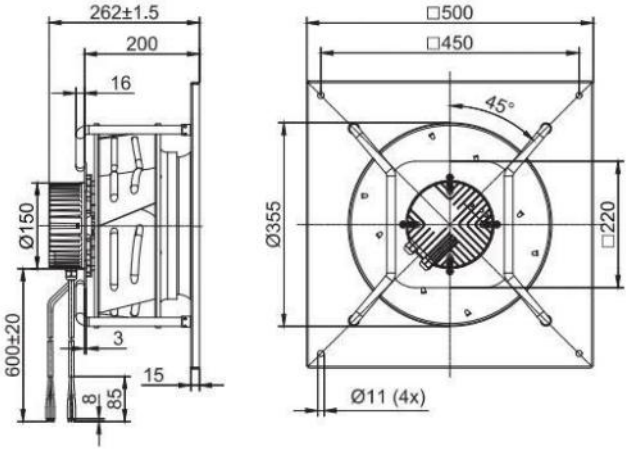

(支架离心风机Centrifugal Fan With Support Bracket)
FK3G355-2AAY-20

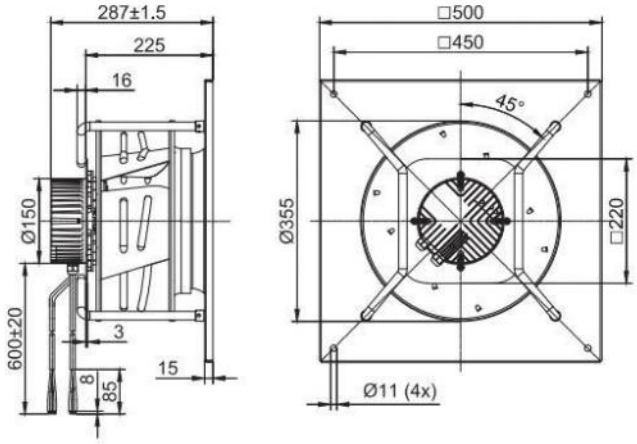

(后向离心风机Centrifugal Fan)
FB3G355-2AAB-67

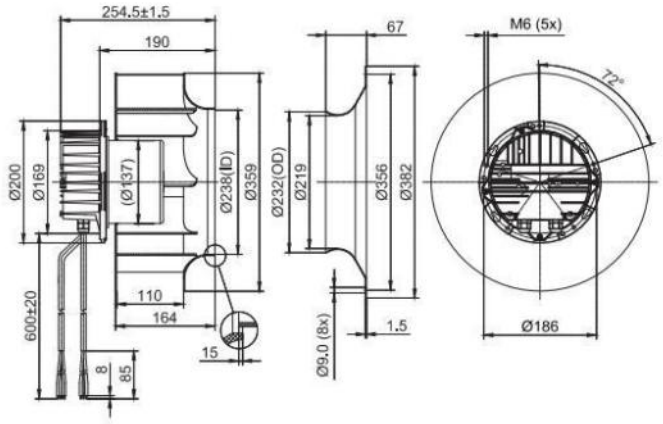

(后向离心风机Centrifugal Fan)
FB3G355-2APK-20

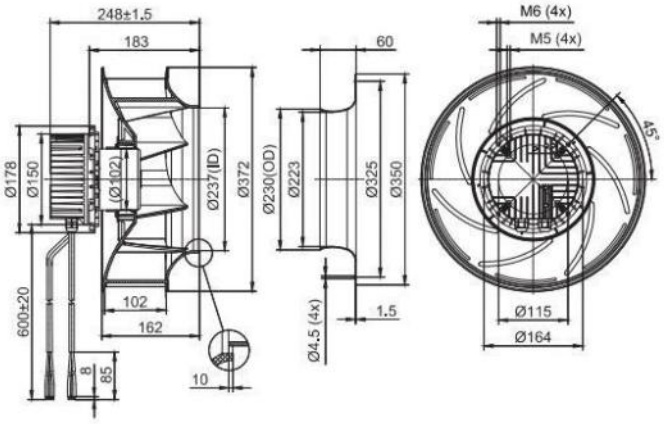

(支架离心风机Centrifugal Fan With Support Bracket)
FK3G355-2AAB-67

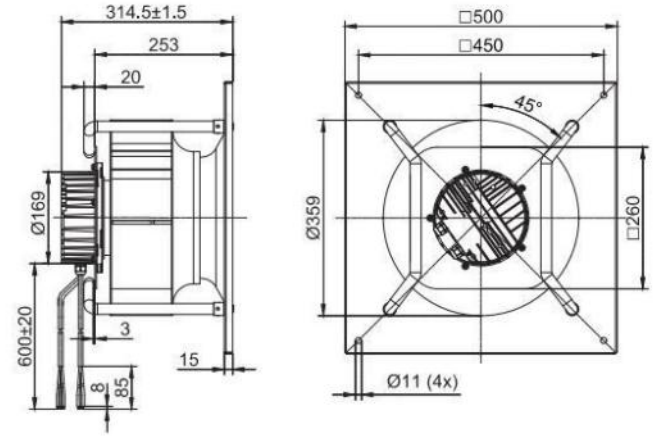

(支架离心风机Centrifugal Fan With Support Bracket)
FK3G355-2APK-20

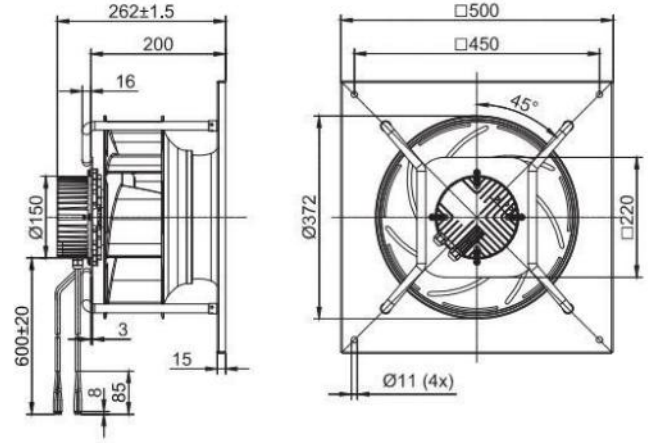

(后向离心风机Centrifugal Fan)
FB3G355-2APK-60

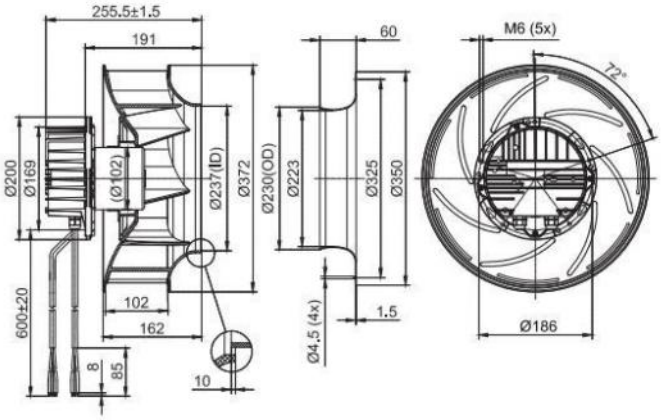

(后向离心风机Centrifugal Fan)
FB3G355-4APK-30

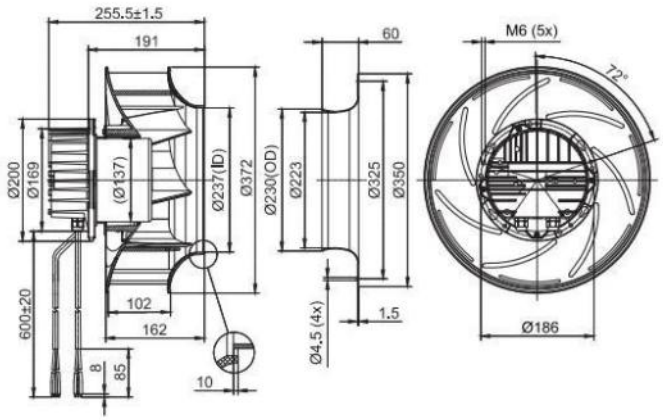

(支架离心风机Centrifugal Fan With Support Bracket)
FK3G355-2APK-60

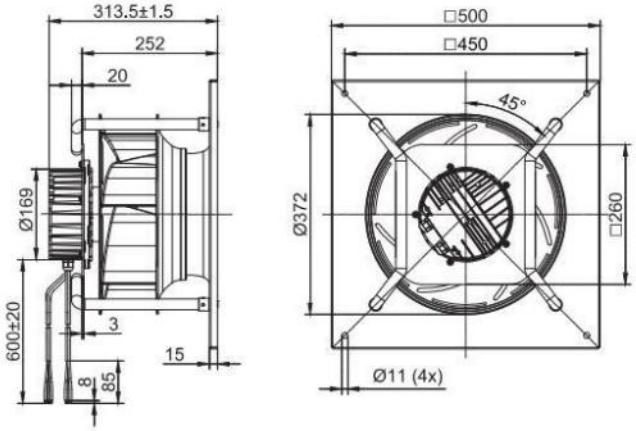

(支架离心风机Centrifugal Fan With Support Bracket)
FK3G355-4APK-30

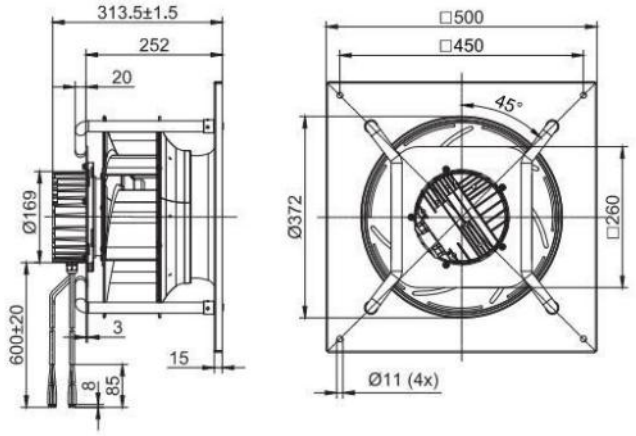

EC Centrifugal Fans



EC Backward Centrifugal Fans D400

- 材料**Material:** 塑料/铝合金
  风轮**Impeller:** Plastic/Aluminium alloy
  转子 Rotor: 电泳Electrophoresis
  端盖 Electronics housing: 压铸铝Die-cast aluminium
- 叶片数量**Number of blades:** 7/8
- 防护等级**Degree of protection:** IP 54
- 绝缘等级**Insulation class:** B/F
- 安装位置**Installation position:** 任意Any
- 模式**Mode:**连续工作制 Continuous operation (S1)

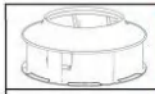	电机 Motor	曲线 Curve	额定电压 Nominal voltage	额定电压范围 Nominal Voltage Range	频率 Frequency	电流 Current	转速 Speed	输入功率 Max. input Power
Type			VAC	VAC	HZ	A	RPM	W
FB3G400-2AAP-20	BLEC102	Ⓐ	230	184~270	50/60	2.1	1500	300
FB3G400-2AAB-67	BLEC102	Ⓑ	230	184~270	50/60	3.1	1800	700
FB3G400-4AAL-80	BLEC188	Ⓒ	380	304~456	50/60	3.5	2450	2000
FB3G400-2APK-20	BLEC102	Ⓓ	230	184~270	50/60	2.2	1500	500
FB3G400-2APK-60	BLEC102	Ⓔ	230	184~270	50/60	3.3	1700	750
FB3G400-4APK-30	BLEC137	Ⓕ	380	304~456	50/60	2.1	2060	1320

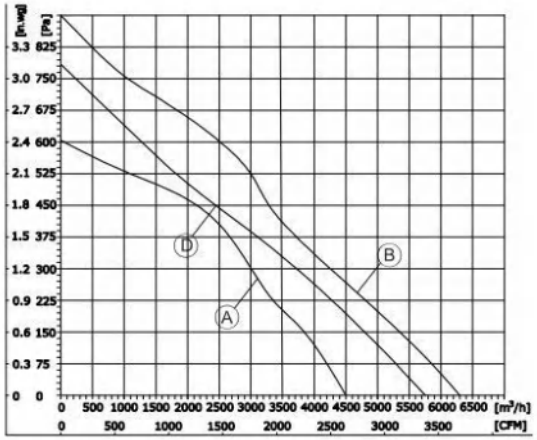

1、Air performance measured according to: ISO 5801, with DJ inlet ring without contact protection.
2、Intake-side sound level: LpA measured at 1 m distance from fan axis. The values given are only applicable under the specifi ed measuring conditions and may differ depending on the installation conditions.

EC Centrifugal Fan

EC Backward Centrifugal Fans D400

- 旋转方向**Direction of rotation:** 正转，从转子方向Clockwise，viewed toward rotor
- 技术特性**Technical features:** 参见附图See connection diagram
- 泄漏电流**Touch curren:** < 3,5 mA
- 能效**Efficiency:** ErP2015
- 标准/证书**Valid For Approval/Standard**：CE,RoHS,ISO9001
  环境温度**Perm. ambient temp.**：-25℃~+60℃
- 安装**Mounting:** 免维护滚珠轴承Maintenance-free ball bearings

噪音等级 Sound Pressure Level	风量 Air Flow	风压 Air Pressure	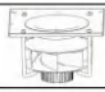	速度控制 Speed Control	接线图 Wiring Mode
dB(A)	m³/h	Pa	with support bracket		
76.9	4494	604	FK3G400-2AAP-20	0-10VDC PWM Modbus485	F3,F5
79	6300	900	FK3G400-2AAB-67		F7
89	8400	1260	FK3G400-4AAL-80		F8
80	5755	785	FK3G400-2APK-20		F3,F5
83	6350	950	FK3G400-2APK-60		F7
89	6950	980	FK3G400-4APK-30		F8

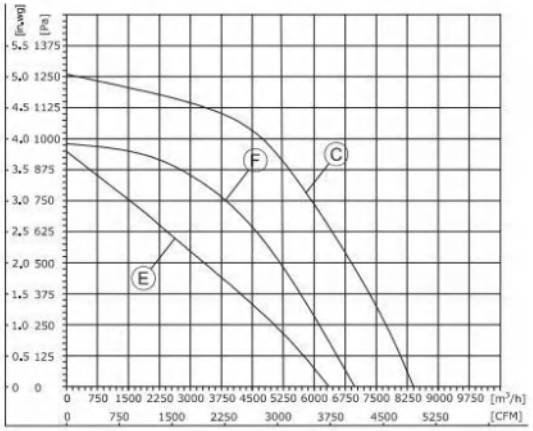

1、Air performance measured according to: ISO 5801, with DJ inlet ring without contact protection.
2、Intake-side sound level: LpA measured at 1 m distance from fan axis. The values given are only applicable under the specifi ed measuring conditions and may differ depending on the installation conditions.

(后向离心风机Centrifugal Fan)
FB3G400-2AAP-20

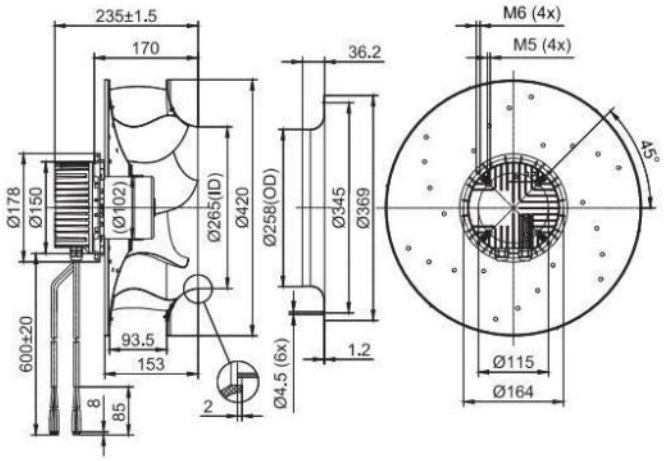

(后向离心风机Centrifugal Fan)
FB3G400-2AAB-67

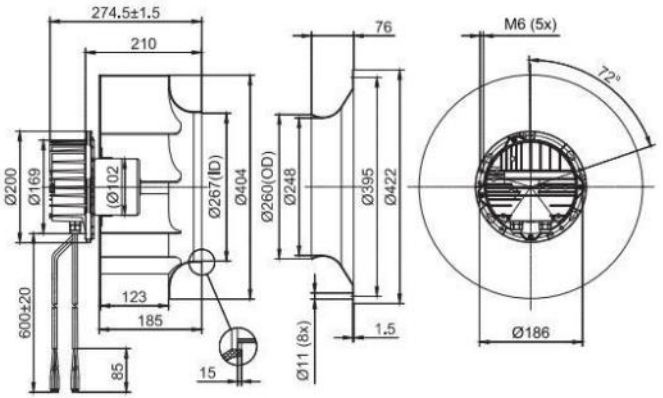

(支架离心风机Centrifugal Fan With Support Bracket)
FK3G400-2AAP-20

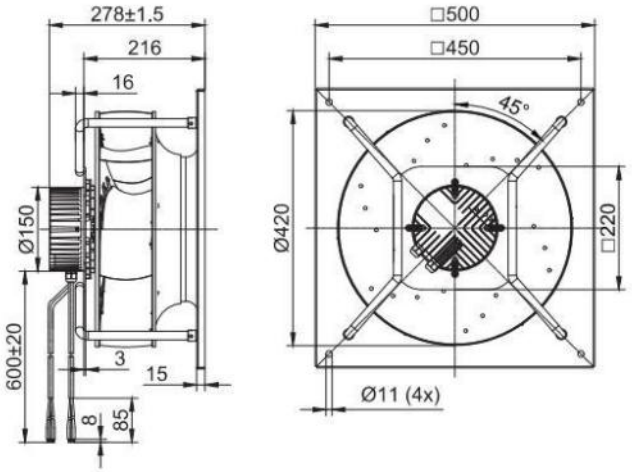

(支架离心风机Centrifugal Fan With Support Bracket)
FK3G400-2AAB-67

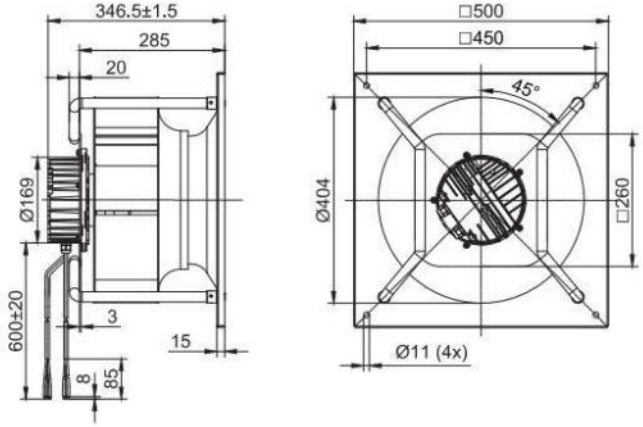

(后向离心风机Centrifugal Fan)
FB3G400-4AAL-80

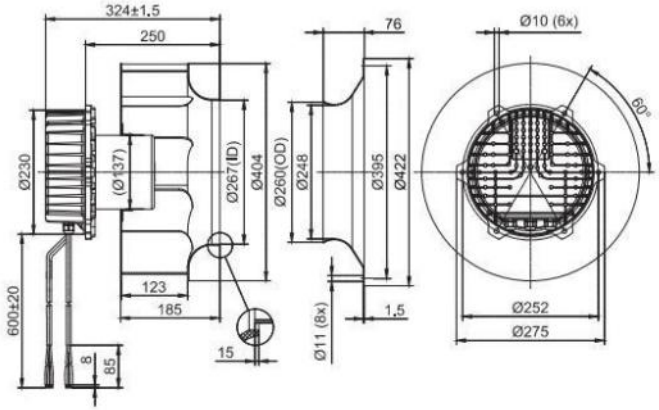

(后向离心风机Centrifugal Fan)
FB3G400-2APK-20

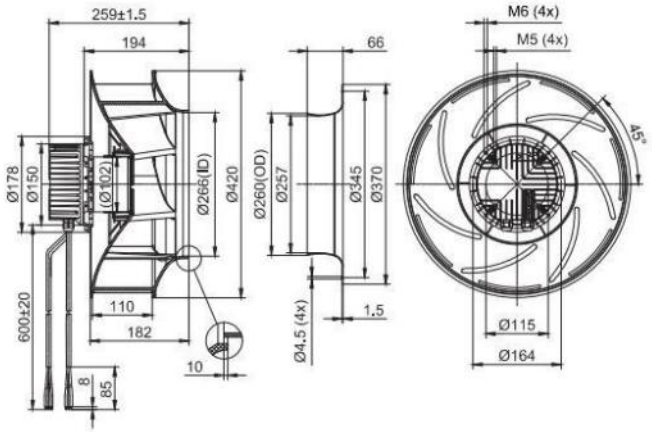

(支架离心风机Centrifugal Fan With Support Bracket)
FK3G400-4AAL-80

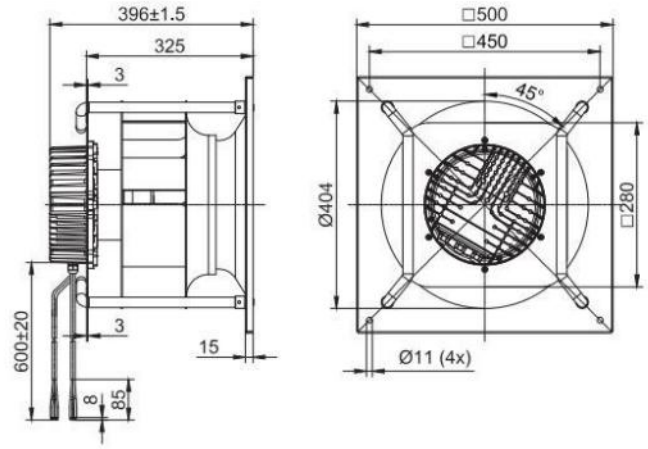

(支架离心风机Centrifugal Fan With Support Bracket)
FK3G400-2APK-20

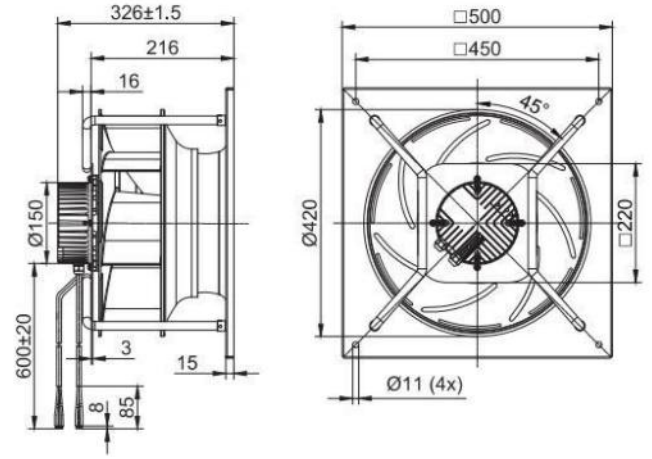

(后向离心风机Centrifugal Fan)
FB3G400-2APK-60

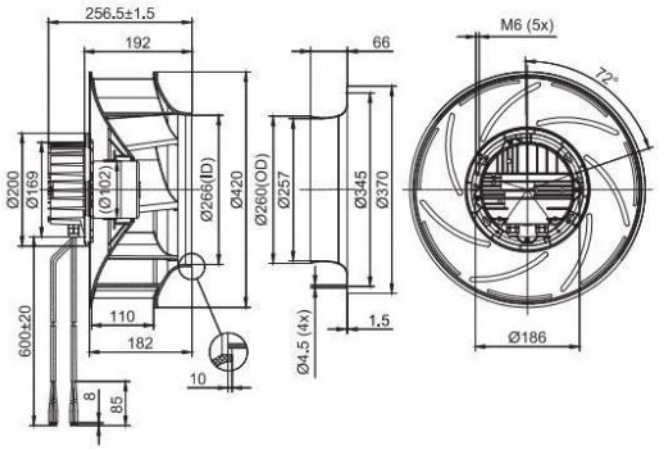

(后向离心风机Centrifugal Fan)
FB3G400-4APK-30

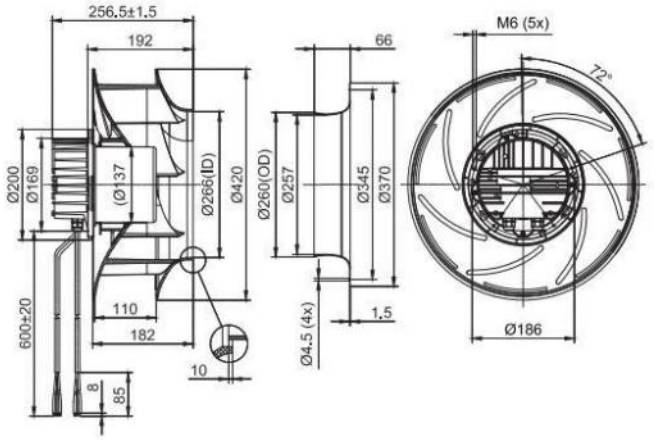

(支架离心风机Centrifugal Fan With Support Bracket)
FK3G400-2APK-60

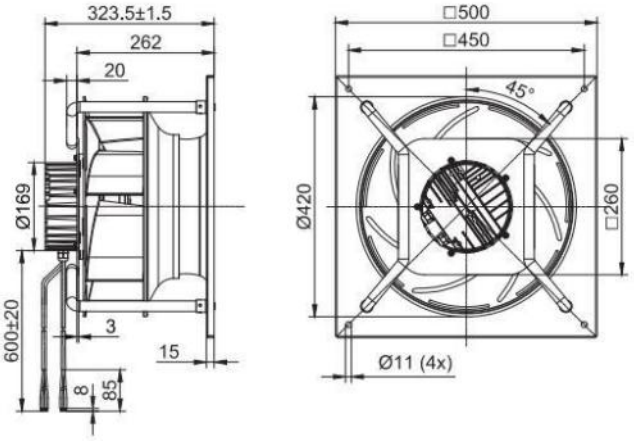

(支架离心风机Centrifugal Fan With Support Bracket)
FK3G400-4APK-30

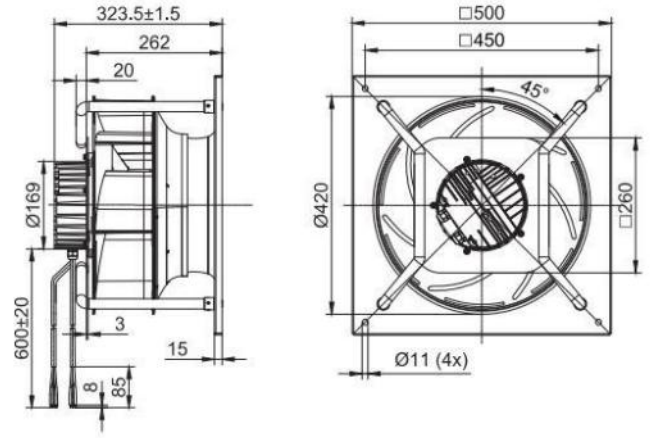



EC Backward Centrifugal Fans D450

- 材料**Material:** 铝合金 风轮**Impeller:** Aluminium alloy
  转子 Rotor: 电泳Electrophoresis
  端盖 Electronics housing: 压铸铝Die-cast aluminium
- 叶片数量**Number of blades:** 6/8
- 防护等级**Degree of protection:** IP 54
- 绝缘等级**Insulation class:** B/F
- 安装位置**Installation position:** 任意Any
- 模式**Mode:**连续工作制 Continuous operation (S1)

	电机 Motor	曲线 Curve	额定电压 Nominal Voltage	额定电压范围 Nominal Voltage Range	频率 Frequency	电流 Current	转速 Speed	输入功率 Max. input Power
Type			VAC	VAC	Hz	A	RPM	W
FB3G450-2AAL-20	BLEC102	Ⓐ	230	184~270	50/60	2.1	1300	500
FB3G450-2AAY-30	BLEC137	Ⓑ	230	184~270	50/60	3.2	1450	700
FB3G450-4AAY-30	BLEC137	Ⓒ	380	304~456	50/60	1.67	1450	1000
FB3G450-4AAY-80	BLEC188	Ⓓ	380	304~456	50/60	2.2	1700	1200

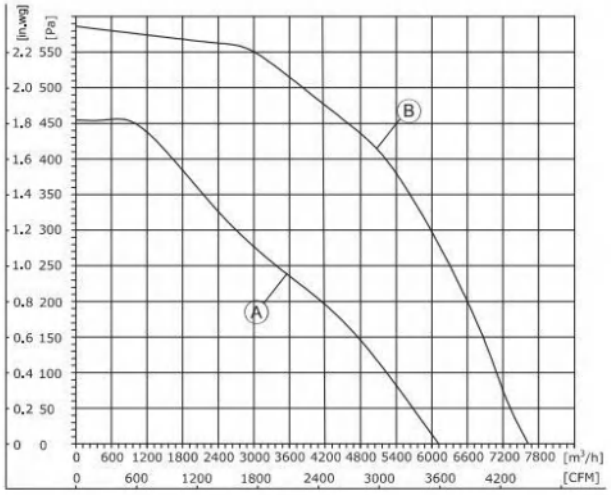

1、Air performance measured according to: ISO 5801, with DJ inlet ring without contact protection.
2、Intake-side sound level: LpA measured at 1 m distance from fan axis. The values given are only applicable under the specifi ed measuring conditions and may differ depending on the installation conditions.

EC Backward Centrifugal Fans D450

- 旋转方向**Direction of rotation:** 正转，从转子方向Clockwise，viewed toward rotor
- 技术特性**Technical features:** 参见附图See connection diagram
- 泄漏电流**Touch curren:** < 3,5 mA
- 能效**Efficiency:** ErP2015
- 标准/证书**Valid For Approval/Standard**：CE,RoHS,ISO9001
  环境温度**Perm. ambient temp.**：-25℃~+60℃
- 安装**Mounting:** 免维护滚珠轴承Maintenance-free ball bearings

EC Centrifugal Fan

噪音等级 Sound Pressure Level	风量 Air Flow	风压 Air Pressure		速度控制 Speed Control	接线图 Wiring Mode
dB(A)	m³/h	Pa	with support bracket		
76	6110	455	FK3G133-2APL-50	0-10VDC PWM Modbus485	F3,F5
80	7626	587	FK3G133-2APL-51		F7
80	7700	665	FK3G133-2APL-70		F8
89	8400	815	FK3G133-2APL-70		F8

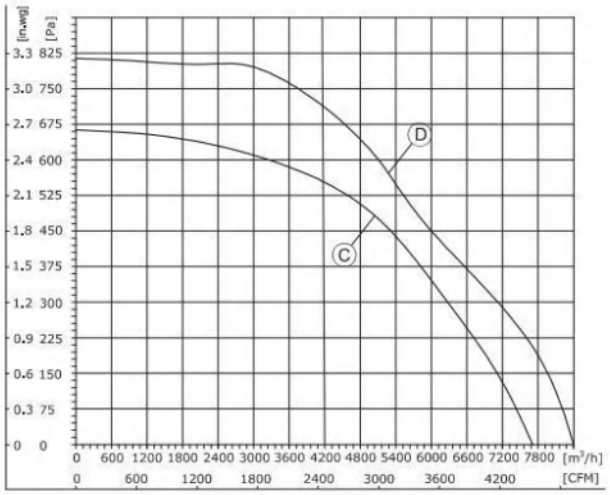

1、Air performance measured according to: ISO 5801, with DJ inlet ring without contact protection.
2、Intake-side sound level: LpA measured at 1 m distance from fan axis. The values given are only applicable under the specifi ed measuring conditions and may differ depending on the installation conditions.

(后向离心风机Centrifugal Fan)
FB3G450-2AAL-20

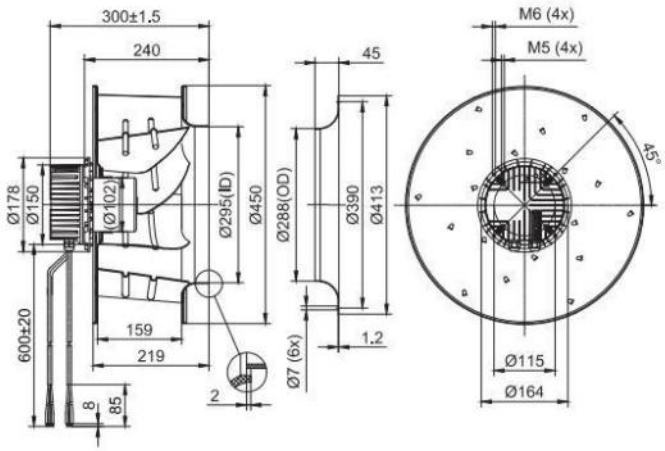

(后向离心风机Centrifugal Fan)
FB3G450-2AAY-30

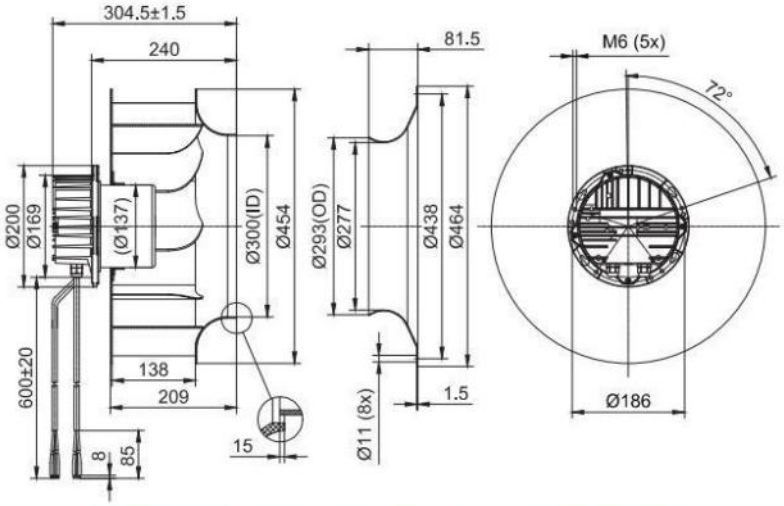

(支架离心风机Centrifugal Fan With Support Bracket)
FK3G450-2AAL-20

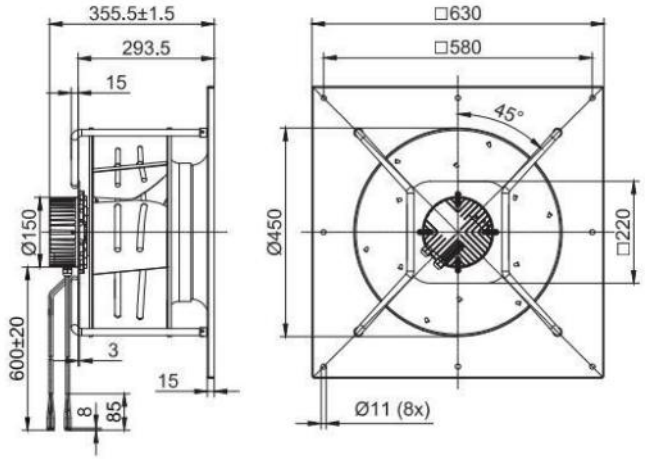

(支架离心风机Centrifugal Fan With Support Bracket)
FK3G450-2AAY-30

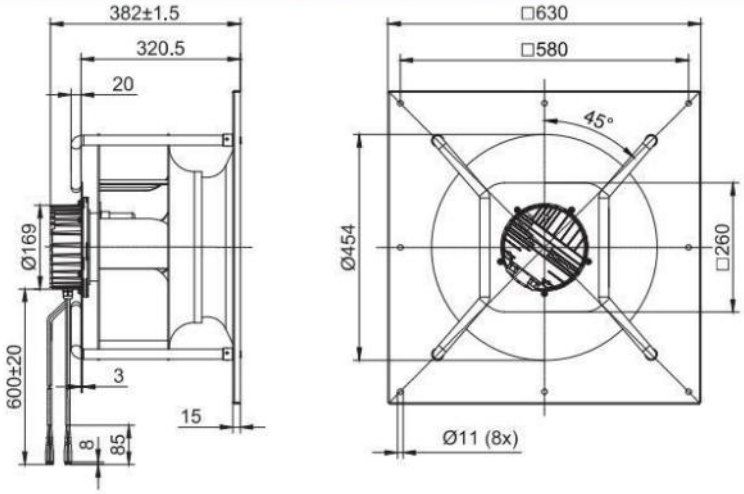

(后向离心风机Centrifugal Fan)
FB3G450-4AAY-30

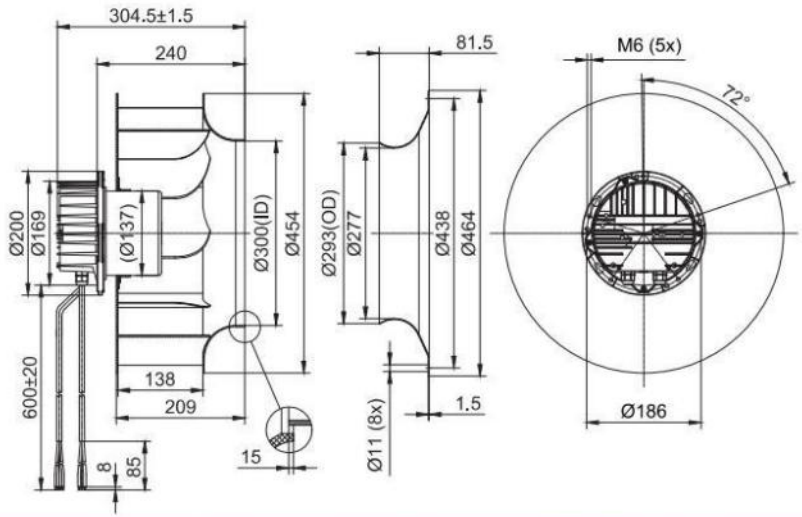

(后向离心风机Centrifugal Fan)
FB3G450-4AAY-80

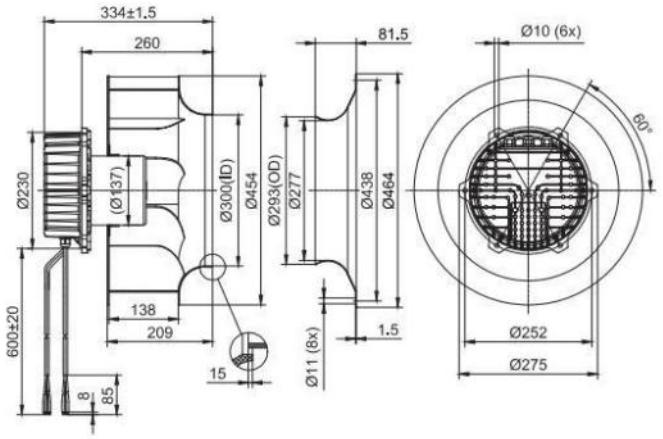

(支架离心风机Centrifugal Fan With Support Bracket)
FK3G450-4AAY-30

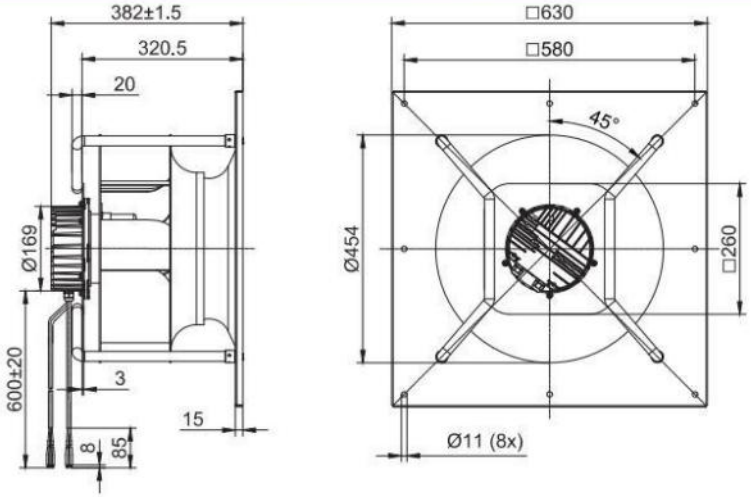

(支架离心风机Centrifugal Fan With Support Bracket)
FK3G450-4AAY-80

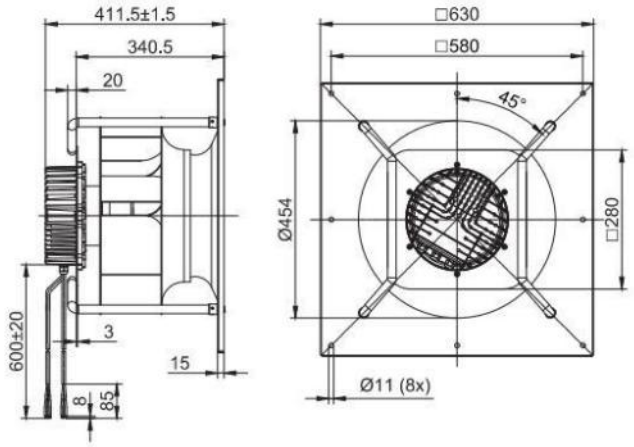

EC Centrifugal Fans



EC Backward Centrifugal Fans D500

- 材料**Material:** 铝合金 风轮**Impeller:** Aluminium alloy
  转子 Rotor: 电泳Electrophoresis
  端盖 Electronics housing: 压铸铝Die-cast aluminium
- 叶片数量**Number of blades:** 8
- 防护等级**Degree of protection:** IP 54
- 绝缘等级**Insulation class:** F
- 安装位置**Installation position:** 任意Any
- 模式**Mode:**连续工作制 Continuous operation (S1)

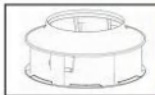	电机 **Motor**	曲线 **Curve**	额定电压 **Nominal Voltage**	额定电压范围 **Nominal Voltage Range**	频率 **Frequency**	电流 **Current**	转速 **Speed**	输入功率 **Max. input Power**
Type			VAC	VAC	Hz	A	RPM	W
FB3G500-4AAL-30	BLEC137	Ⓐ	380	304~456	50/60	1.45	1100	850
FB3G500-4AAL-80	BLEC188	Ⓑ	380	304~456	50/60	2.7	1400	1650

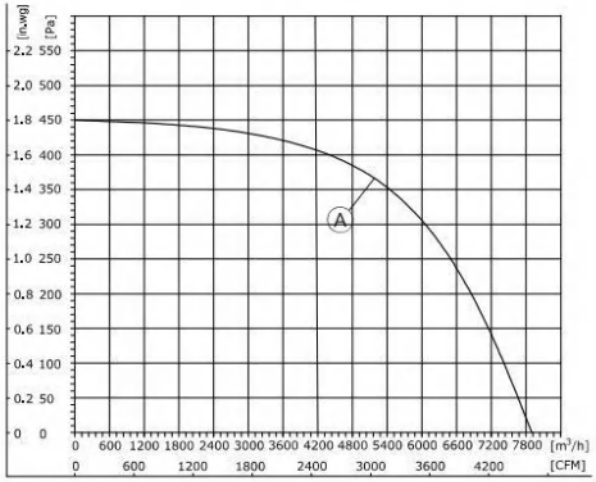

1、Air performance measured according to: ISO 5801, with DJ inlet ring without contact protection.
2、Intake-side sound level: LpA measured at 1 m distance from fan axis. The values given are only applicable under the specifi ed measuring conditions and may differ depending on the installation conditions.

EC Backward Centrifugal Fans D500

- 旋转方向**Direction of rotation:** 正转，从转子方向Clockwise，viewed toward rotor
- 技术特性**Technical features:** 参见附图See connection diagram
- 泄漏电流**Touch curren:** < 3,5 mA
- 能效**Efficiency:** ErP2015
- 标准/证书**Valid For Approval/Standard**：CE,RoHS,ISO9001
  环境温度**Perm. ambient temp.**：.-25℃~+60℃
- 安装**Mounting:** 免维护滚珠轴承Maintenance-free ball bearings

噪音等级 **Sound pressure level**	风量 **Air Flow**	风压 **Air pressure**	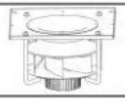	速度控制 **Speed Control**	接线图 **Wiring Mode**
dB(A)	m³/h	Pa	with support bracket	0-10VDC PWM Modbus485	
83.5	7900	450	FK3G500-4AAL-30		F8
86	9000	750	FK3G500-4AAL-80		F8

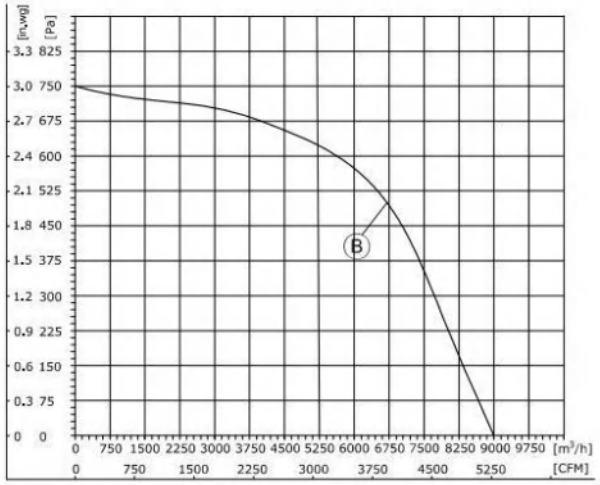

1、Air performance measured according to: ISO 5801, with DJ inlet ring without contact protection.
2、Intake-side sound level: LpA measured at 1 m distance from fan axis. The values given are only applicable under the specifi ed measuring conditions and may differ depending on the installation conditions.

(后向离心风机Centrifugal Fan)
FB3G500-4AAL-30

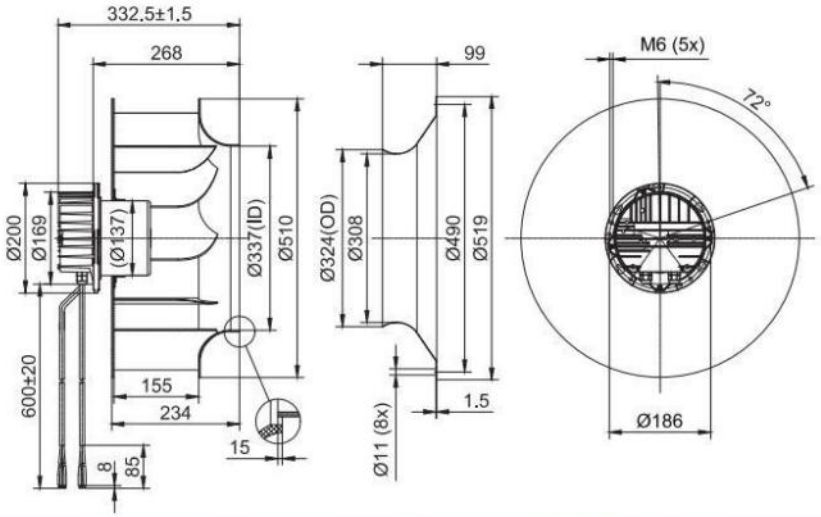

(后向离心风机Centrifugal Fan)
FB3G500-4AAL-80

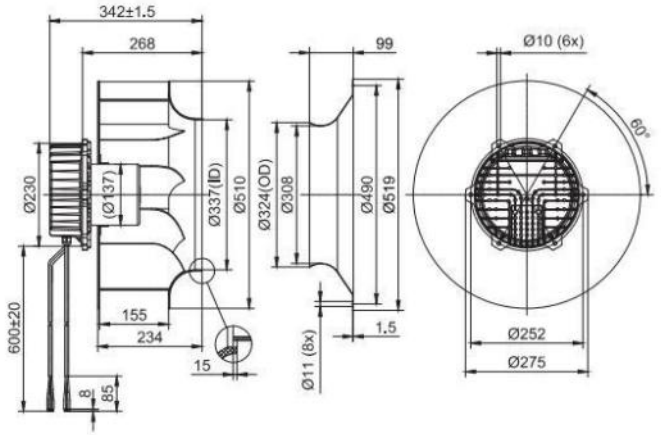

(支架离心风机Centrifugal Fan With Support Bracket)
FK3G500-4AAL-30

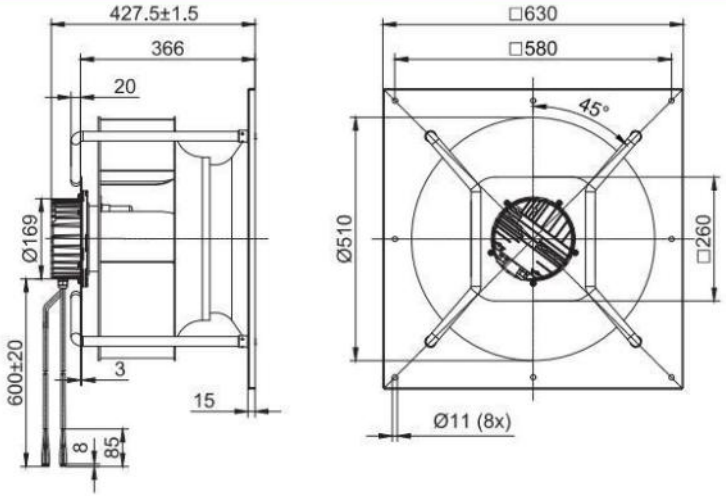

(支架离心风机Centrifugal Fan With Support Bracket)
FK3G500-4AAL-80

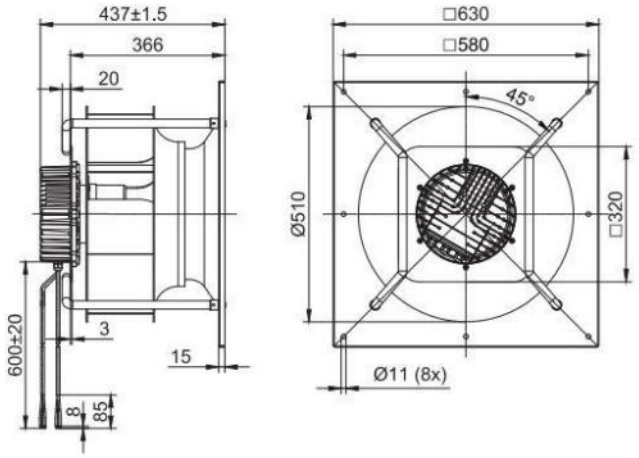



EC Backward Centrifugal Fans D560

- 材料**Material:** 铝合金 风轮**Impeller:**Aluminium alloy
  转子 Rotor: 电泳Electrophoresis
  端盖 Electronics housing: 压铸铝Die-cast aluminium
- 叶片数量**Number of blades:** 8
- 防护等级**Degree of protection:** IP 54
- 绝缘等级**Insulation class:** F
- 安装位置**Installation position:** 任意Any
- 模式**Mode:**连续工作制 Continuous operation (S1)

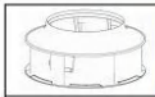	电机 **Motor**	曲线 **Curve**	额定电压 **Nominal Voltage**	额定电压范围 **Nominal Voltage Range**	频率 **Frequency**	电流 **Current**	转速 **Speed**	输入功率 **Max. input Power**
Type			VAC	VAC	Hz	A	RPM	W
FB3G560-4AAL-30	BLEC137	Ⓐ	380	304~456	50/60	2.5	1300	1500
FB3G560-4AAL-80	BLEC188	Ⓑ	380	304~456	50/60	3.15	1450	2000

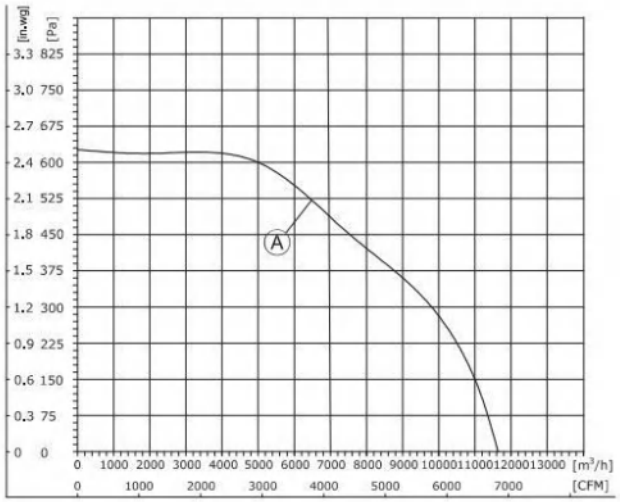

1、Air performance measured according to: ISO 5801, with DJ inlet ring without contact protection.
2、Intake-side sound level: LpA measured at 1 m distance from fan axis. The values given are only applicable under the specifi ed measuring conditions and may differ depending on the installation conditions.

EC Backward Centrifugal Fans D560

- 旋转方向**Direction of rotation:** 正转，从转子方向Clockwise，viewed toward rotor
- 技术特性**Technical features:** 参见附图See connection diagram
- 泄漏电流**Touch curren:** < 3,5 mA
- 能效**Efficiency:** ErP2015
- 标准/证书**Valid For Approval/Standard:** CE,RoHS,ISO9001
  环境温度**Perm. ambient temp.:** -25℃~+60℃
- 安装**Mounting:** 免维护滚珠轴承Maintenance-free ball bearings

噪音等级 **Sound pressure level**	风量 **Air Flow**	风压 **Air pressure**	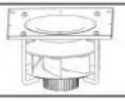	速度控制 **Speed Control**	接线图 **Wiring Mode**
dB(A)	m³/h	Pa	with support bracket	0-10VDC PWM Modbus485	
83	11610	625	FK3G560-4AAL-30		F8
86	12800	880	FK3G560-4AAL-80		F8

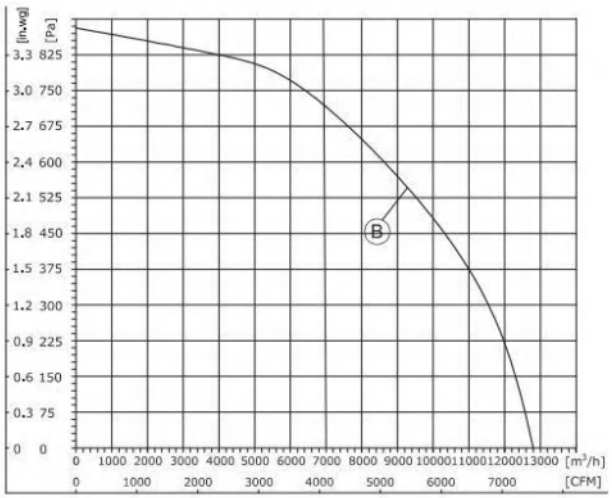

1、Air performance measured according to: ISO 5801, with DJ inlet ring without contact protection.
2、Intake-side sound level: LpA measured at 1 m distance from fan axis. The values given are only applicable under the specifi ed measuring conditions and may differ depending on the installation conditions.

(后向离心风机Centrifugal Fan)
FB3G560-4AAL-30

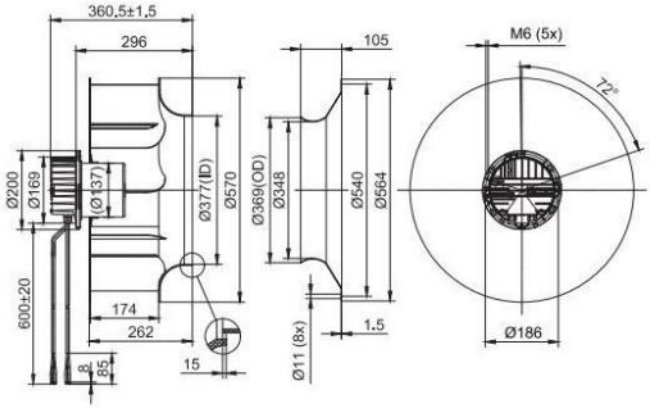

(后向离心风机Centrifugal Fan)
FB3G560-4AAL-80

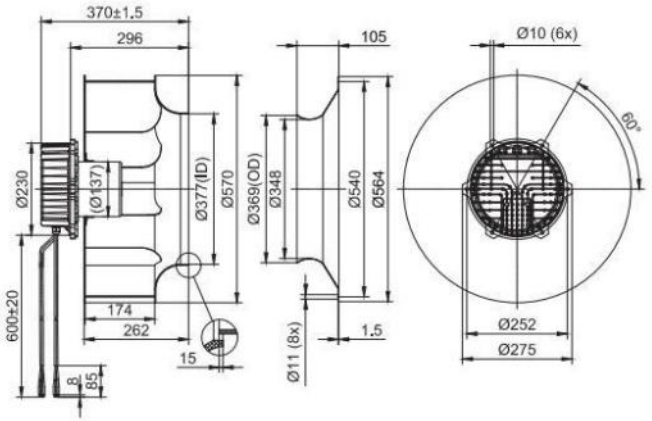

(支架离心风机Centrifugal Fan With Support Bracket)
FK3G560-4AAL-30

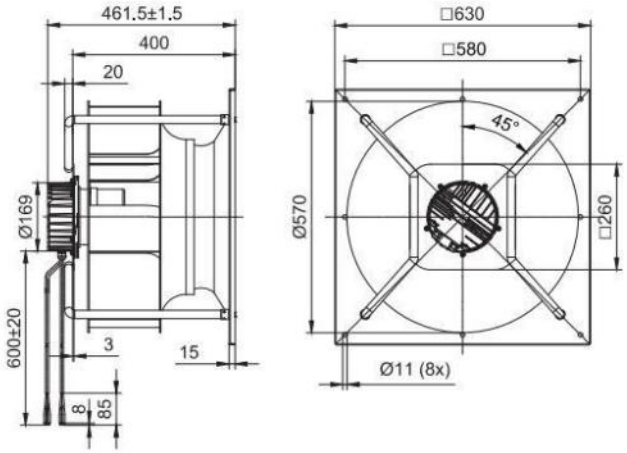

(支架离心风机Centrifugal Fan With Support Bracket)
FK3G560-4AAL-80

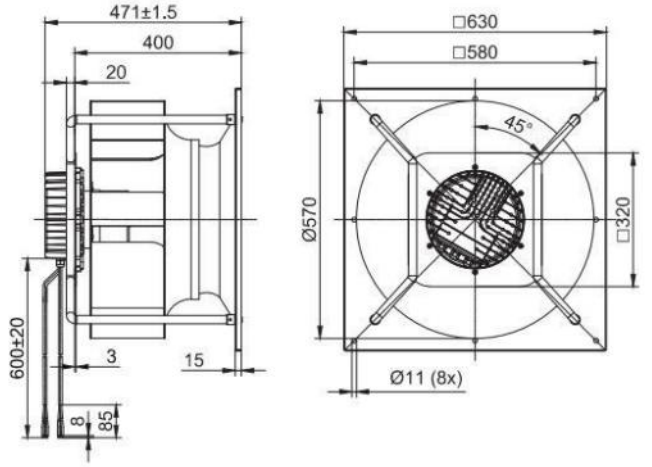

EC Duct Fans

EC Centrifugal Fan

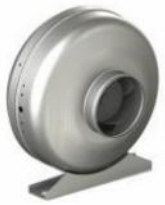

EC Backward Centrifugal Fans D175

- 材料**Material:** 塑料
  风轮**Impeller:** Plastic
  转子 Rotor: 电泳Electrophoresis
  端盖 Electronics housing: 压铸铝Die-cast aluminium
- 叶片数量**Number of blades:** 7
- 防护等级**Degree of protection:** IP 44
- 绝缘等级**Insulation class:** B
- 安装位置**Installation position:** 任意Any
- 模式**Mode:**连续工作制 Continuous operation (S1)

EC Backward Centrifugal Fans D175

- 旋转方向**Direction of rotation:** 正转，从转子方向Clockwise，viewed toward rotor
- 技术特性**Technical features:** 参见附图See connection diagram
- 泄漏电流**Touch curren:** < 3,5 mA
- 能效**Efficiency:** ErP2015
- 标准/证书**Valid For Approval/Standard:** CE,RoHS,ISO9001
  环境温度**Perm. ambient temp.:** -25℃~+60℃
- 安装**Mounting:** 免维护滚珠轴承Maintenance-free ball bearings

EC Centrifugal Fan

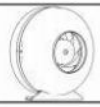	电机 **Motor**	曲线 **Curve**	额定电压 **Nominal Voltage**	额定电压范围 **Nominal Voltage Range**	频率 **Frequency**	电流 **Current**	转速 **Speed**	输入功率 **Max. input Power**
Type			VAC	VAC	Hz	A	RPM	W
FP3G175-2APY-70	BLEC72	Ⓐ	230	184~270	50/60	0.5	3300	85

噪音等级 **Sound Pressure Level**	风量 **Air Flow**	风压 **Air Pressure**	速度控制 **Speed Control**	接线图 **Wiring Mode**
dB(A)	m³/h	Pa		
72	315	904	0-10VDC PWM	F1

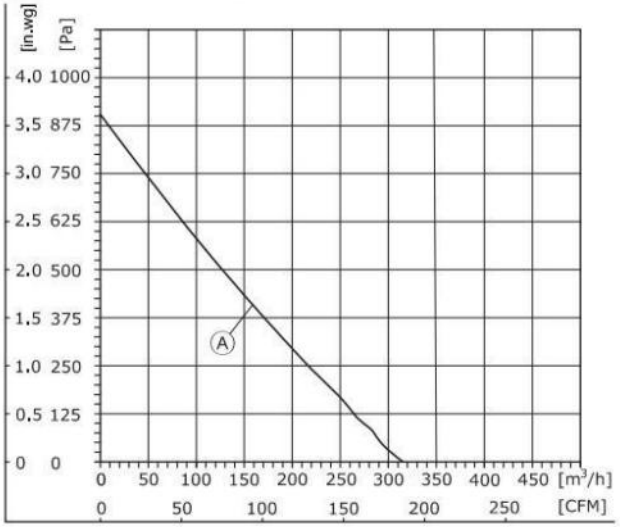

1、Air performance measured according to: ISO 5801, with DJ inlet ring without contact protection.
2、Intake-side sound level: LpA measured at 1 m distance from fan axis. The values given are only applicable under the specifi ed measuring conditions and may differ depending on the installation conditions.

(管道风机 EC Duct Fana)
FP3G175-2APY-70

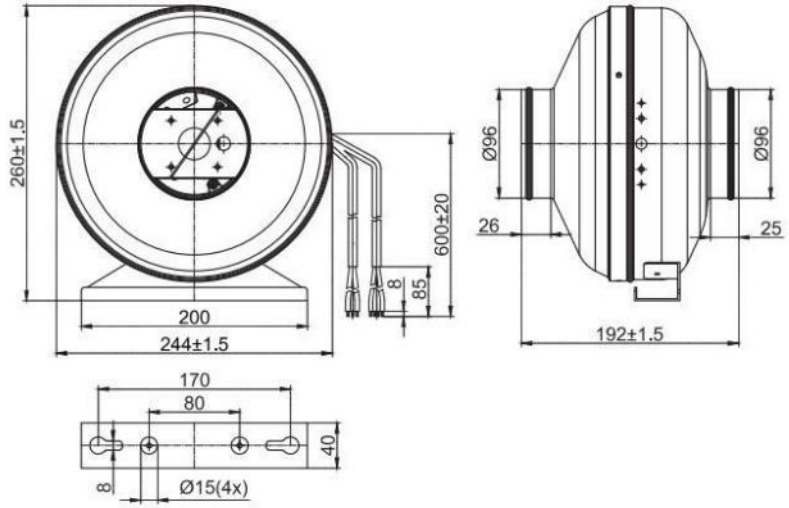



EC Backward Centrifugal Fans D190

- 材料**Material:** 塑料
  风轮**Impeller:** Plastic
  转子 Rotor: 电泳Electrophoresis
  端盖 Electronics housing: 压铸铝Die-cast aluminium
- 叶片数量**Number of blades:** 7
- 防护等级**Degree of protection:** IP 44
- 绝缘等级**Insulation class:** B
- 安装位置**Installation position:** 任意Any
- 模式**Mode:**连续工作制 Continuous operation (S1)

EC Backward Centrifugal Fans D190

- 旋转方向**Direction of rotation:** 正转，从转子方向Clockwise，viewed toward rotor
- 技术特性**Technical features:** 参见附图See connection diagram
- 泄漏电流**Touch curren:** < 3,5 mA
- 能效**Efficiency:** ErP2015
- 标准/证书**Valid For Approval/Standard**：CE,RoHS,ISO9001
  环境温度**Perm. ambient temp.**：-25℃~+60℃
- 安装**Mounting:** 免维护滚珠轴承Maintenance-free ball bearings

EC Centrifugal Fan

	电机 Motor	曲线 Curve	额定电压 Nominal Voltage	额定电压范围 Nominal Voltage Range	频率 Frequency	电流 Current	转速 Speed	输入功率 Max. input Power
Type			VAC	VAC	Hz	A	RPM	W
FP3G175-2APY-70	BLEC72	Ⓐ	230	184~270	50/60	0.55	3200	85

噪音等级 Sound Pressure Level	风量 Air Flow	风压 Air Pressure	速度控制 Speed Control	接线图 Wiring Mode
dB(A)	m³/h	Pa		
69	375	819	0-10VDC PWM	F1

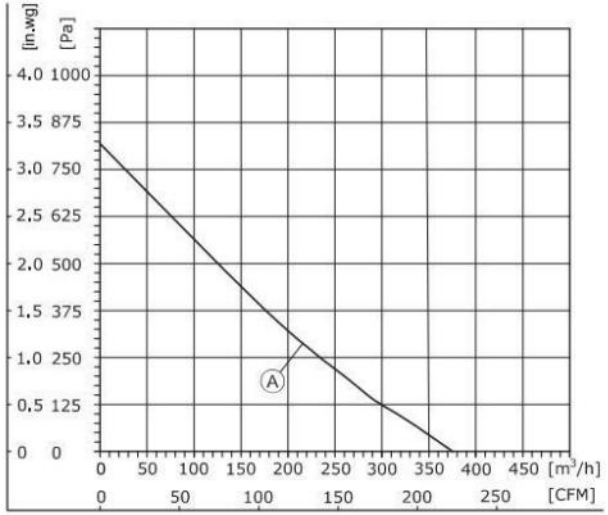

1、Air performance measured according to: ISO 5801, with DJ inlet ring without contact protection.
2、Intake-side sound level: LpA measured at 1 m distance from fan axis. The values given are only applicable under the specifi ed measuring conditions and may differ depending on the installation conditions.

(管道风机 EC Duct Fana)
FP3G190-2APY-70

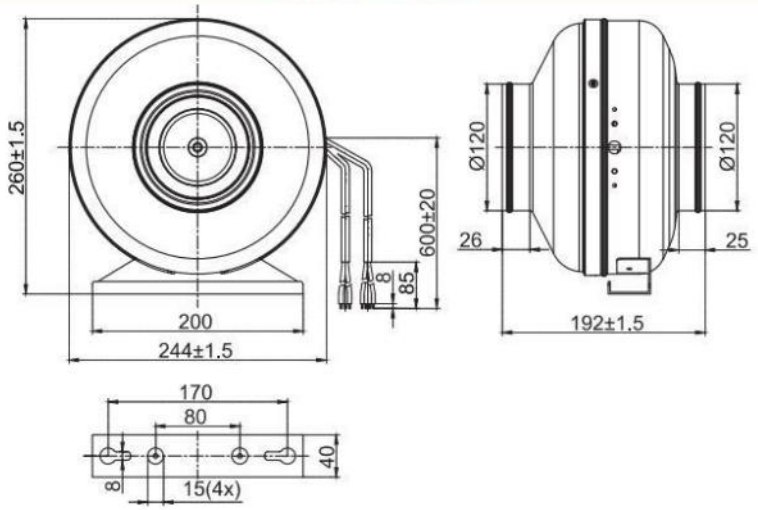

EC Duct Fans



EC Backward Centrifugal Fans D220

- 材料**Material:** 塑料
  风轮**Impeller:** Plastic
  转子 Rotor: 电泳Electrophoresis
  端盖 Electronics housing: 压铸铝Die-cast aluminium
- 叶片数量**Number of blades:** 11
- 防护等级**Degree of protection:** IP 44
- 绝缘等级**Insulation class:** B
- 安装位置**Installation position:** 任意Any
- 模式**Mode:**连续工作制 Continuous operation (S1)

EC Backward Centrifugal Fans D220

- 旋转方向**Direction of rotation:** 正转，从转子方向Clockwise，viewed toward rotor
- 技术特性**Technical features:** 参见附图See connection diagram
- 泄漏电流**Touch curren:** < 3,5 mA
- 能效**Efficiency:** ErP2015
- 标准/证书**Valid For Approval/Standard**：CE,RoHS,ISO9001
  环境温度**Perm. ambient temp.**：-25℃~+60℃
- 安装**Mounting:** 免维护滚珠轴承Maintenance-free ball bearings

EC Centrifugal Fan

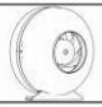	电机 Motor	曲线 Curve	额定电压 Nominal Voltage	额定电压范围 Nominal Voltage Range	频率 Frequency	电流 Current	转速 Speed	输入功率 Max. input Power
Type			VAC	VAC	Hz	A	RPM	W
FP3G220-2APL-90	BLEC72	Ⓐ	230	184~270	50/60	0.5	2600	85

噪音等级 Sound Pressure Level	风量 Air Flow	风压 Air Pressure	速度控制 Speed Control	接线图 Wiring Mode
dB(A)	m³/h	Pa		
68	677	593	0-10VDC PWM	F1

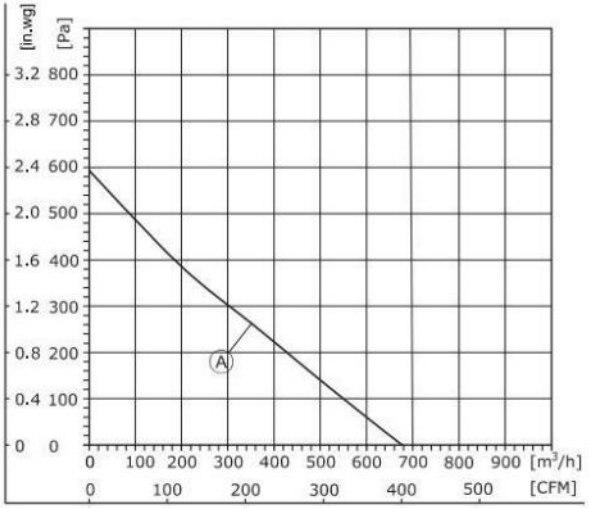

1、Air performance measured according to: ISO 5801, with DJ inlet ring without contact protection.
2、Intake-side sound level: LpA measured at 1 m distance from fan axis. The values given are only applicable under the specifi ed measuring conditions and may differ depending on the installation conditions.

(管道风机 EC Duct Fana)
FP3G220-2APL-90

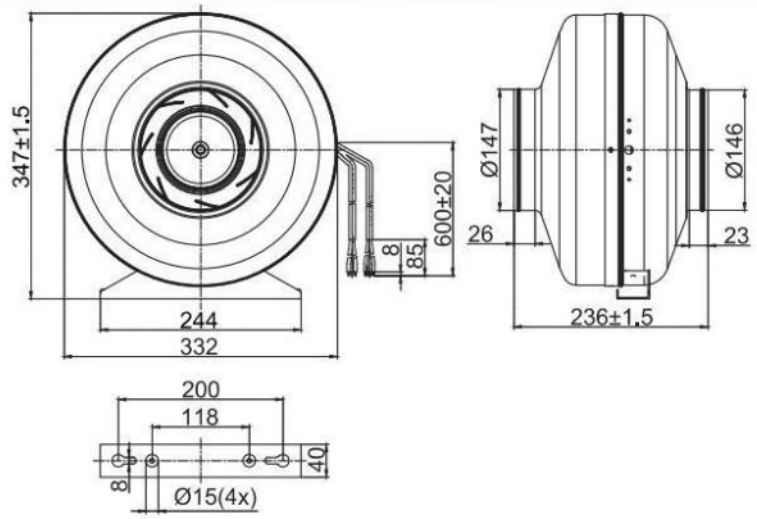



EC Backward Centrifugal Fans D220

- 材料**Material:** 塑料
  风轮**Impeller:** Plastic
  转子 Rotor: 电泳Electrophoresis
  端盖 Electronics housing: 压铸铝Die-cast aluminium
- 叶片数量**Number of blades:** 11
- 防护等级**Degree of protection:** IP 44
- 绝缘等级**Insulation class:** B
- 安装位置**Installation position:** 任意Any
- 模式**Mode:**连续工作制 Continuous operation (S1)

EC Backward Centrifugal Fans D220

- 旋转方向**Direction of rotation:** 正转，从转子方向Clockwise，viewed toward rotor
- 技术特性**Technical features:** 参见附图See connection diagram
- 泄漏电流**Touch curren:** < 3,5 mA
- 能效**Efficiency:** ErP2015
- 标准/证书**Valid For Approval/Standard**：CE,RoHS,ISO9001
  环境温度**Perm. ambient temp.**：-25℃~+60℃
- 安装**Mounting:** 免维护滚珠轴承Maintenance-free ball bearings

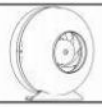	电机 Motor	曲线 Curve	额定电压 Nominal Voltage	额定电压范围 Nominal Voltage Range	频率 Frequency	电流 Current	转速 Speed	输入功率 Max. input Power
Type			VAC	VAC	Hz	A	RPM	W
FP3G220-2APY-90	BLEC72	Ⓐ	230	184~270	50/60	0.5	2750	85

噪音等级 Sound Pressure Level	风量 Air Flow	风压 Air Pressure	速度控制 Speed Control	接线图 Wiring Mode
dB(A)	m³/h	Pa		
71	667	505	0-10VDC PWM	F1

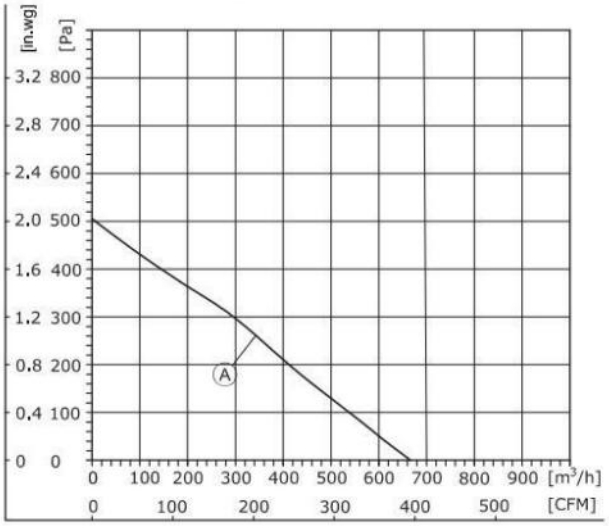

1、Air performance measured according to: ISO 5801, with DJ inlet ring without contact protection.
2、Intake-side sound level: LpA measured at 1 m distance from fan axis. The values given are only applicable under the specifi ed measuring conditions and may differ depending on the installation conditions.

(管道风机 EC Duct Fana)
FP3G220-2APY-90

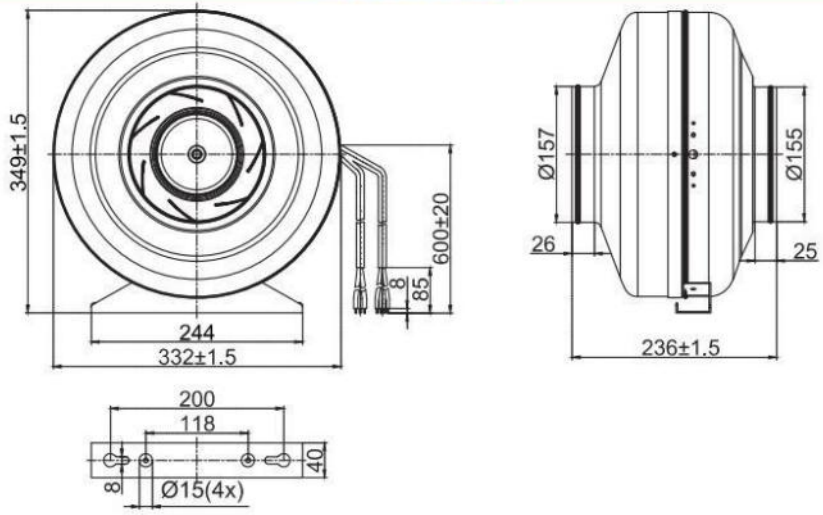



EC Backward Centrifugal Fans D250

- 材料**Material:** 塑料
  风轮**Impeller:** Plastic
  转子 Rotor: 电泳Electrophoresis
  端盖 Electronics housing: 压铸铝Die-cast aluminium
- 叶片数量**Number of blades:** 7
- 防护等级**Degree of protection:** IP 44
- 绝缘等级**Insulation class:** B
- 安装位置**Installation position:** 任意Any
- 模式**Mode:**连续工作制 Continuous operation (S1)

EC Backward Centrifugal Fans D250

- 旋转方向**Direction of rotation:** 正转，从转子方向Clockwise，viewed toward rotor
- 技术特性**Technical features:** 参见附图See connection diagram
- 泄漏电流**Touch curren:** < 3,5 mA
- 能效**Efficiency:** ErP2015
- 标准/证书**Valid For Approval/Standard**：CE,RoHS,ISO9001
  环境温度**Perm. ambient temp.**：-25℃~+60℃
- 安装**Mounting:** 免维护滚珠轴承Maintenance-free ball bearings

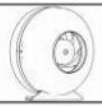	电机 Motor	曲线 Curve	额定电压 Nominal Voltage	额定电压范围 Nominal Voltage Range	频率 Frequency	电流 Current	转速 Speed	输入功率 Max. input Power
Type			VAC	VAC	Hz	A	RPM	W
FP3G250-2APS-90	BLEC72	Ⓐ	230	184~270	50/60	1.1	2750	170

噪音等级 Sound Pressure Level	风量 Air Flow	风压 Air Pressure	速度控制 Speed Control	接线图 Wiring Mode
dB(A)	m³/h	Pa		
73	1178	1003	0-10VDC PWM	F2

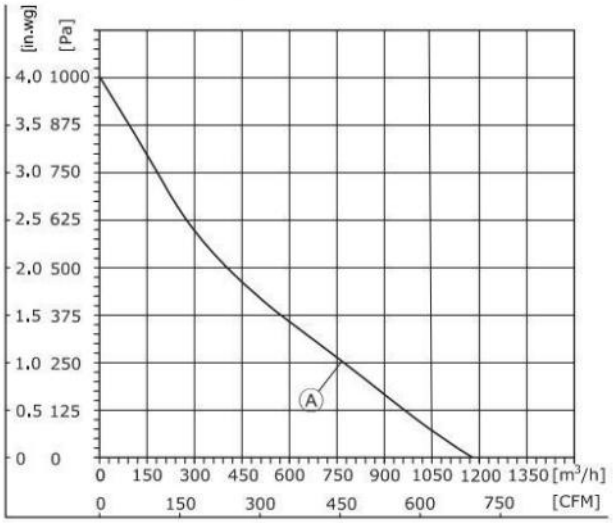

1、Air performance measured according to: ISO 5801, with DJ inlet ring without contact protection.
2、Intake-side sound level: LpA measured at 1 m distance from fan axis. The values given are only applicable under the specifi ed measuring conditions and may differ depending on the installation conditions.

(管道风机 EC Duct Fana)
FP3G250-2APS-90

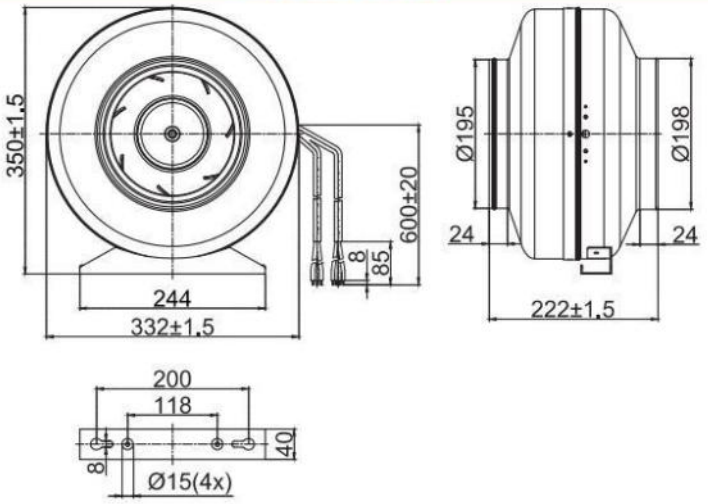



EC Backward Centrifugal Fans D250

- 材料**Material:** 塑料
  风轮**Impeller:** Plastic
  转子 Rotor: 电泳Electrophoresis
  端盖 Electronics housing: 压铸铝Die-cast aluminium
- 叶片数量**Number of blades:** 7
- 防护等级**Degree of protection:** IP 44
- 绝缘等级**Insulation class:** B
- 安装位置**Installation position:** 任意Any
- 模式**Mode:**连续工作制 Continuous operation (S1)

EC Backward Centrifugal Fans D250

- 旋转方向**Direction of rotation:** 正转，从转子方向Clockwise，viewed toward rotor
- 技术特性**Technical features:** 参见附图See connection diagram
- 泄漏电流**Touch curren:** < 3,5 mA
- 能效**Efficiency:** ErP2015
- 标准/证书**Valid For Approval/Standard**：CE,RoHS,ISO9001
  环境温度**Perm. ambient temp.**：-25℃~+60℃
- 安装**Mounting:** 免维护滚珠轴承Maintenance-free ball bearings

EC Centrifugal Fan

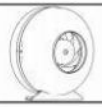	电机 **Motor**	曲线 **Curve**	额定电压 **Nominal Voltage**	额定电压范围 **Nominal Voltage Range**	频率 **Frequency**	电流 **Current**	转速 **Speed**	输入功率 **Max. input Power**
Type			VAC	VAC	Hz	A	RPM	W
FP3G250-2APL-90	BLEC92	Ⓐ	230	184~270	50/60	1.1	2750	170

噪音等级 **Sound Pressure Level**	风量 **Air Flow**	风压 **Air Pressure**	速度控制 **Speed Control**	接线图 **Wiring Mode**
dB(A)	m³/h	Pa		
68	1195	1002	0-10VDC PWM RS-485	F2

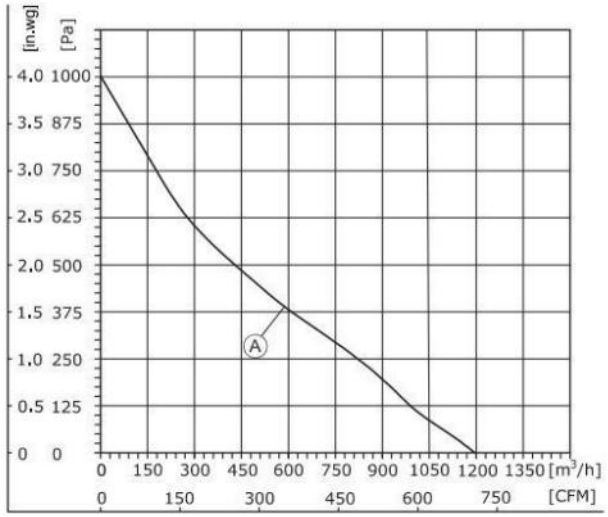

1、Air performance measured according to: ISO 5801, with DJ inlet ring without contact protection.
2、Intake-side sound level: LpA measured at 1 m distance from fan axis. The values given are only applicable under the specifi ed measuring conditions and may differ depending on the installation conditions.

(管道风机 EC Duct Fana)
FP3G250-2APL-90

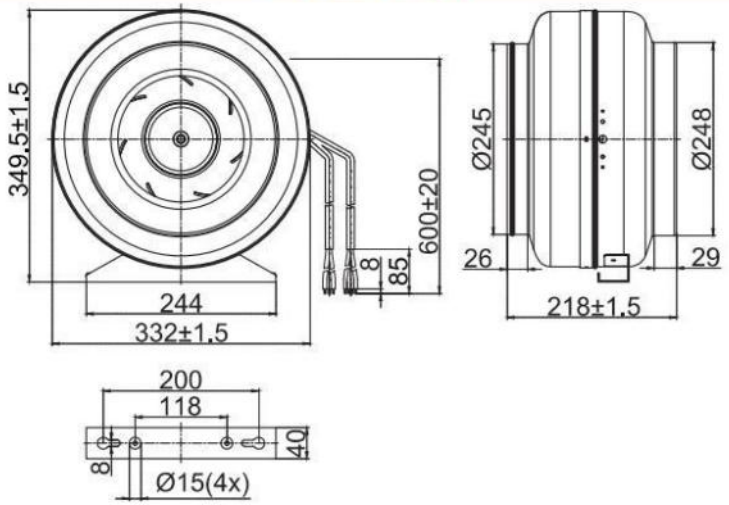



EC Backward Centrifugal Fans D310

- 材料**Material:** 铝合金
  风轮**Impeller:** Aluminium alloy
  转子 Rotor: 电泳Electrophoresis
  端盖 Electronics housing: 压铸铝Die-cast aluminium
- 叶片数量**Number of blades:** 6
- 防护等级**Degree of protection:** IP 44
- 绝缘等级**Insulation class:** B
- 安装位置**Installation position:** 任意Any
- 模式**Mode:**连续工作制 Continuous operation (S1)

	电机 **Motor**	曲线 **Curve**	额定电压 **Nominal Voltage**	额定电压范围 **Nominal Voltage Range**	频率 **Frequency**	电流 **Current**	转速 **Speed**	输入功率 **Max. input Power**
Type			VAC	VAC	Hz	A	RPM	W
FP3G310-2AAL-90	BLEC92	Ⓐ	230	184~270	50/60	1.4	2700	220

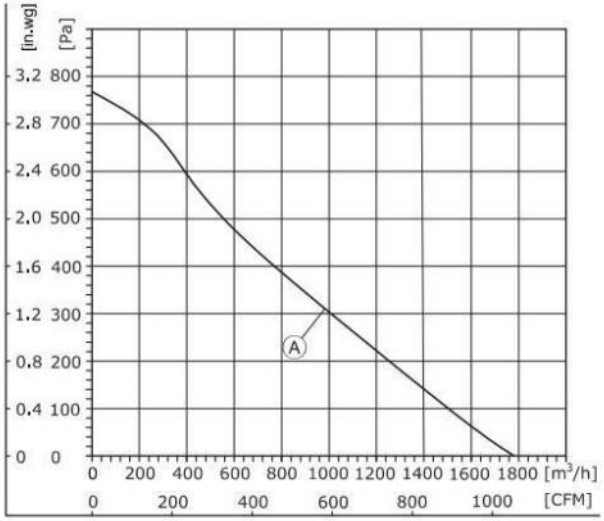

1、Air performance measured according to: ISO 5801, with DJ inlet ring without contact protection.
2、Intake-side sound level: LpA measured at 1 m distance from fan axis. The values given are only applicable under the specifi ed measuring conditions and may differ depending on the installation conditions.

EC Centrifugal Fan

EC Backward Centrifugal Fans D310

- 旋转方向**Direction of rotation:** 正转，从转子方向Clockwise，viewed toward rotor
- 技术特性**Technical features:** 参见附图See connection diagram
- 泄漏电流**Touch curren:** < 3,5 mA
- 能效**Efficiency:** ErP2015
- 标准/证书**Valid For Approval/Standard**：CE,RoHS,ISO9001
  环境温度**Perm. ambient temp.**：-25℃~+60℃
- 安装**Mounting:** 免维护滚珠轴承Maintenance-free ball bearings

噪音等级 **Sound Pressure Level**	风量 **Air Flow**	风压 **Air Pressure**	速度控制 **Speed Control**	接线图 **Wiring Mode**
dB(A)	m³/h	Pa		
73	1780	768	0-10VDC PWM RS-485	F2

(管道风机 EC Duct Fana)
FP3G310-2AAL-90

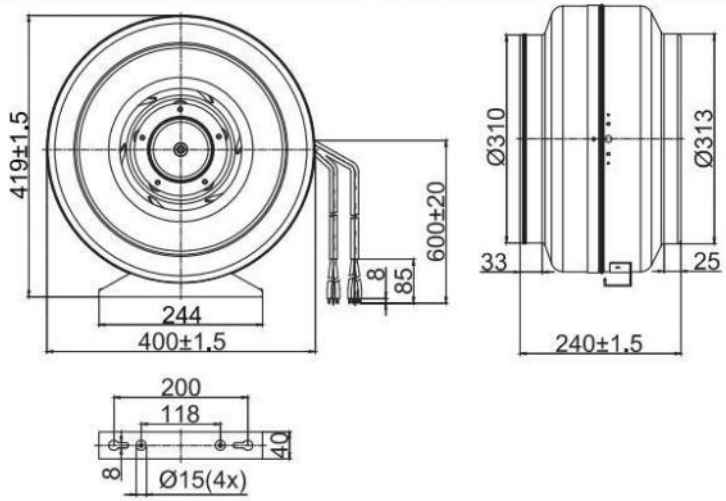



EC Axial Fans D200

- 材料**Material:** 冷轧钢板
  风轮**Impeller:** Cold-roll steel sheets
  转子 Rotor: 电泳Electrophoresis
  端盖 Electronics housing: 压铸铝Die-cast aluminium
- 叶片数量**Number of blades:** 7
- 防护等级**Degree of protection:** IP 44
- 绝缘等级**Insulation class:** B
- 安装位置**Installation position:** 任意Any
- 模式**Mode:**连续工作制 Continuous operation (S1)

	电机 **Motor**	曲线 **Curve**	额定电压 **Nominal Voltage**	额定电压范围 **Nominal Voltage Range**	频率 **Frequency**	电流 **Current**	转速 **Speed**	输入功率 **Max. input Power**
Type			VAC	VAC	Hz	A	RPM	W
FG3G200-2AGN-70	BLEC72	Ⓐ	230	184~270	50/60	0.31	3000	45

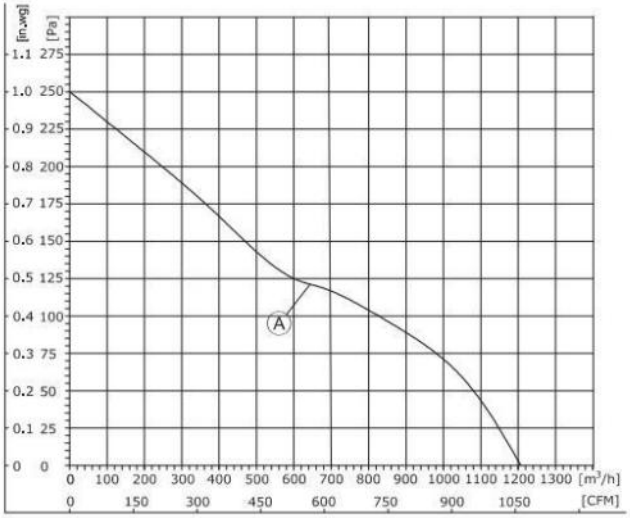

1、Air performance measured according to: ISO 5801, with DJ inlet ring without contact protection.
2、Intake-side sound level: LpA measured at 1 m distance from fan axis. The values given are only applicable under the specifi ed measuring conditions and may differ depending on the installation conditions.

EC Axial Fans D200

- 旋转方向**Direction of rotation:** 反转，从转子方向Anti-clockwise，viewed toward rotor
- 技术特性**Technical features:** 参见附图See connection diagram
- 泄漏电流**Touch curren:** < 3,5 mA
- 能效**Efficiency:** ErP2015
- 标准/证书**Valid For Approval/Standard**：CE,RoHS,ISO9001
  环境温度**Perm. ambient temp.**：-25℃~+60℃
- 安装**Mounting:** 免维护滚珠轴承Maintenance-free ball bearings

噪音等级 **Sound Pressure Level**	风量 **Air Flow**	风压 **Air Pressure**				速度控制 **Speed Control**	接线图 **Wiring Mode**
dB(A)	m³/h	Pa	with guard grille	with wall ring	with wall ring(S)		
62	1205	250	FG3G200-2AGL-70	FW3G200-2AGC-70	FW3G200-2AGS-70	0-10VDC PWM	F1

(轴流风机Axial Fan)
FG3G200-2AGN-70

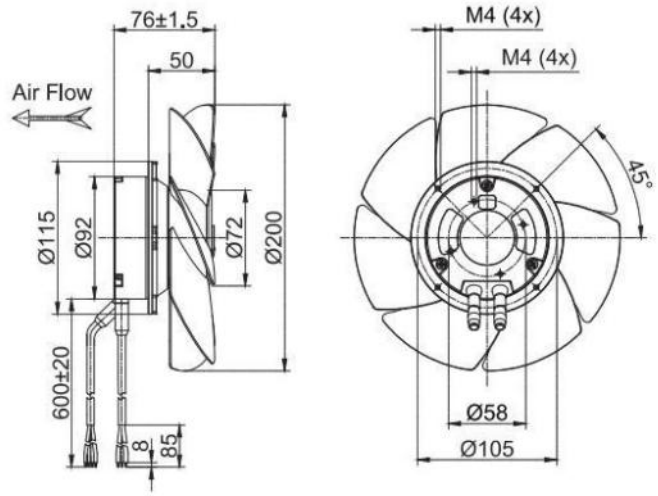

(带导风筒的轴流风机Axial Fan With Wall Ring)
FW3G200-2AGC-70

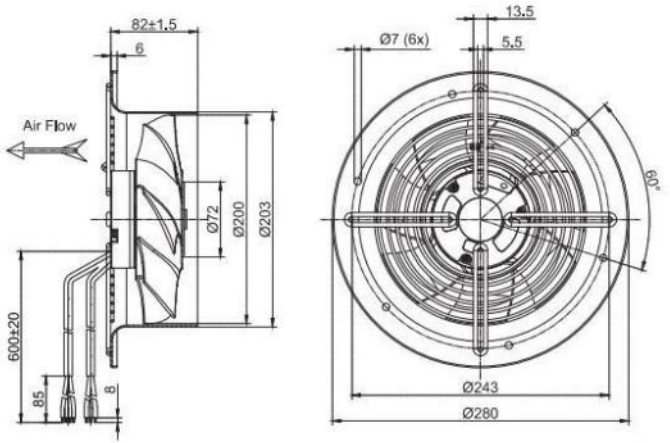

(带网罩的轴流风机Axial Fan With Guard Grille)
FG3G200-2AGL-70

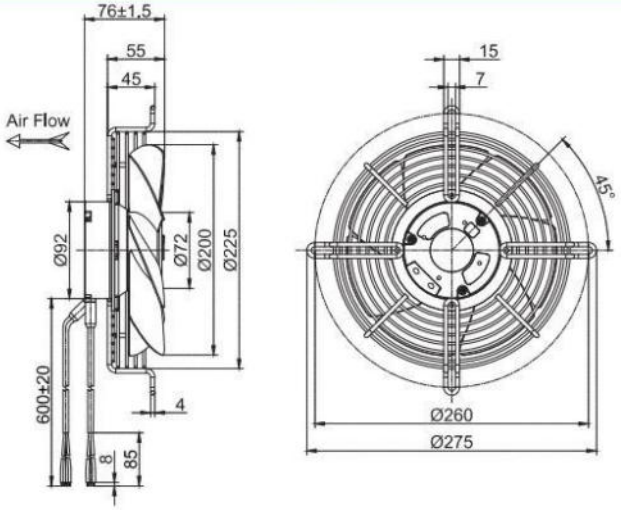

(带导风筒的轴流风机Axial Fan With Wall Ring(S))
FW3G200-2AGS-70

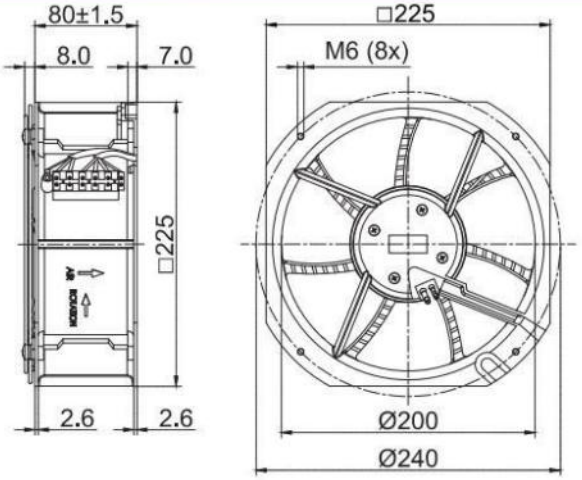



EC Axial Fans D250

- 材料**Material:** 冷轧钢板
  风轮**Impeller:** Cold-roll steel sheets
  转子 Rotor: 电泳Electrophoresis
  端盖 Electronics housing: 压铸铝Die-cast aluminium
- 叶片数量**Number of blades:** 7
- 防护等级**Degree of protection:** IP 44
- 绝缘等级**Insulation class:** B
- 安装位置**Installation position:** 任意Any
- 模式**Mode:**连续工作制 Continuous operation (S1)

	电机 **Motor**	曲线 **Curve**	额定电压 **Nominal Voltage**	额定电压范围 **Nominal Voltage Range**	频率 **Frequency**	电流 **Current**	转速 **Speed**	输入功率 **Max. input Power**
Type			VAC	VAC	Hz	A	RPM	W
FG3G250-2AGN-90	BLEC92	Ⓐ	230	184~270	50/60	0.6	2650	80

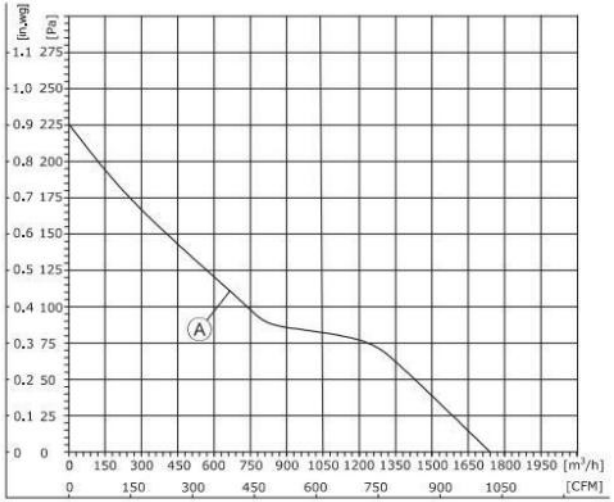

1、Air performance measured according to: ISO 5801, with DJ inlet ring without contact protection.
2、Intake-side sound level: LpA measured at 1 m distance from fan axis. The values given are only applicable under the specifi ed measuring conditions and may differ depending on the installation conditions.

EC Axial Fans D250

- 旋转方向**Direction of rotation:** 反转，从转子方向Anti-clockwise，viewed toward rotor
- 技术特性**Technical features:** 参见附图See connection diagram
- 泄漏电流**Touch curren:** < 3,5 mA
- 能效**Efficiency:** ErP2015
- 标准/证书**Valid For Approval/Standard**：CE,RoHS,ISO9001
  环境温度**Perm. ambient temp.**：-25℃~+60℃
- 安装**Mounting:** 免维护滚珠轴承Maintenance-free ball bearings

噪音等级 **Sound Pressure Level**	风量 **Air Flow**	风压 **Air Pressure**				速度控制 **Speed Control**	接线图 **Wiring Mode**
dB(A)	m³/h	Pa	with guard grille	with wall ring	with wall ring(S)		
61	1740	226	FG3G250-2AGL-90	FW3G250-2AGC-90	FW3G250-2AGS-90	0-10VDC PWM RS-485	F2

(轴流风机Axial Fan)
FG3G250-2AGN-90

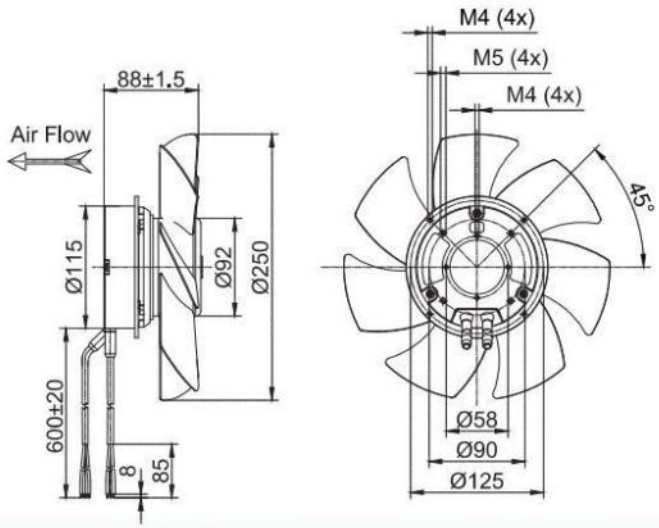

(带网罩的轴流风机Axial Fan With Guard Grille)
FG3G250-2AGL-90

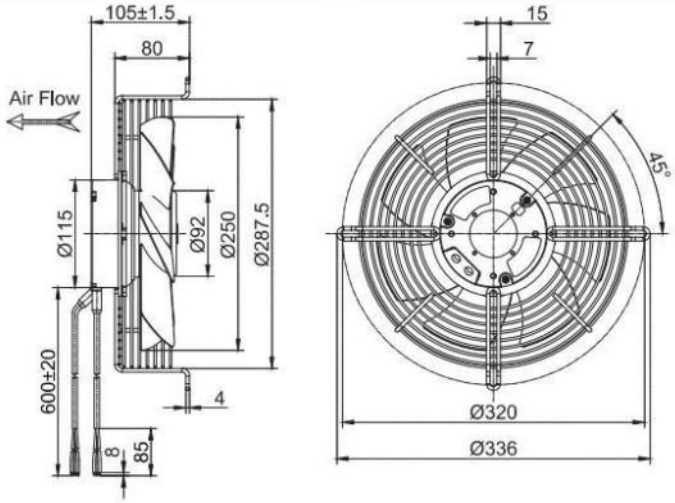

(带导风筒的轴流风机Axial Fan With Wall Ring)
FW3G250-2AGC-90

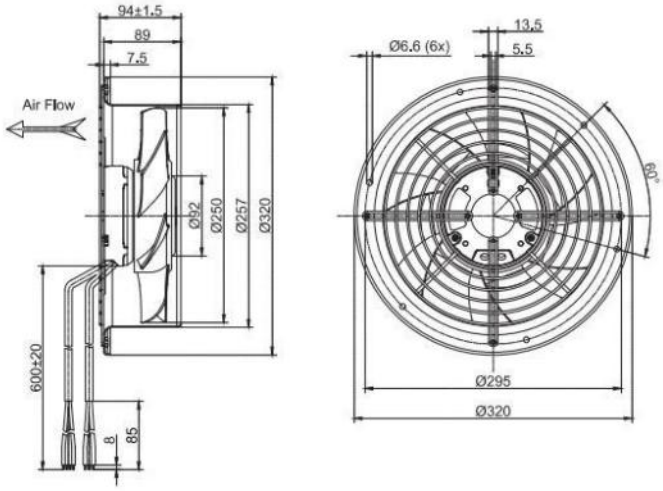

(带导风筒的轴流风机Axial Fan With Wall Ring（S）)
FW3G250-2AGS-90

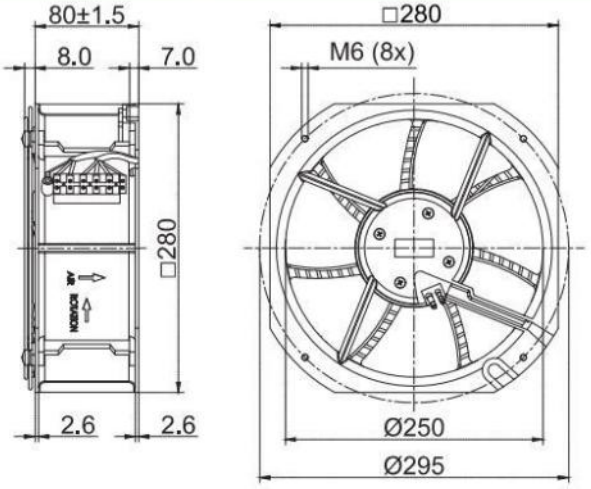



EC Axial Fans D300

- 材料**Material:** 塑料
  风轮**Impeller:** Plastic
  转子 Rotor: 电泳Electrophoresis
  端盖 Electronics housing: 压铸铝Die-cast aluminium
- 叶片数量**Number of blades:** 5
- 防护等级**Degree of protection:** IP 44
- 绝缘等级**Insulation class:** B
- 安装位置**Installation position:** 任意Any
- 模式**Mode:**连续工作制 Continuous operation (S1)

	电机 **Motor**	曲线 **Curve**	额定电压 **Nominal Voltage**	额定电压范围 **Nominal Voltage Range**	频率 **Frequency**	电流 **Current**	转速 **Speed**	输入功率 **Max. input Power**
Type			VAC	VAC	Hz	A	RPM	W
FG3G300-2APN-90	BLEC92	Ⓐ	230	184~270	50/60	1.35	2300	170

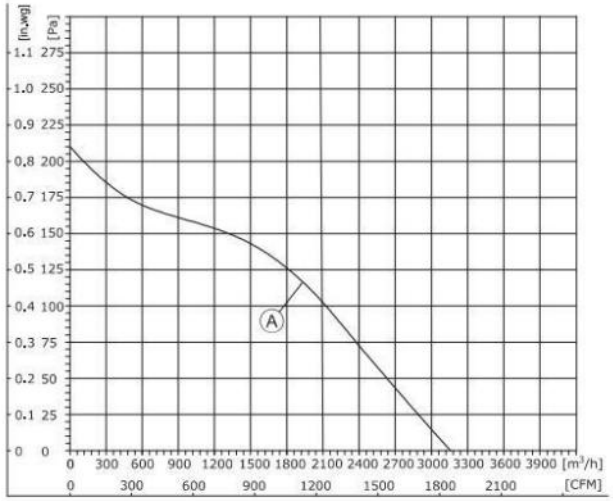

1、Air performance measured according to: ISO 5801, with DJ inlet ring without contact protection.
2、Intake-side sound level: LpA measured at 1 m distance from fan axis. The values given are only applicable under the specifi ed measuring conditions and may differ depending on the installation conditions.

EC Axial Fans D300

- 旋转方向**Direction of rotation:** 反转，从转子方向Anti-clockwise，viewed toward rotor
- 技术特性**Technical features:** 参见附图See connection diagram
- 泄漏电流**Touch curren:** < 3,5 mA
- 能效**Efficiency:** ErP2015
- 标准/证书**Valid For Approval/Standard**：CE,RoHS,ISO9001
  环境温度**Perm. ambient temp.**：-25℃~+60℃
- 安装**Mounting:** 免维护滚珠轴承Maintenance-free ball bearings

噪音等级 **Sound Pressure Level**	风量 **Air Flow**	风压 **Air Pressure**			速度控制 **Speed Control**	接线图 **Wiring Mode**
dB(A)	m³/h	Pa	with guard grille	with wall ring		
64	3160	210	FG3G300-2APL-90	FW3G300-2APC-90	0-10VDC PWM RS-485	F2

(轴流风机Axial Fan)
FG3G300-2APN-90

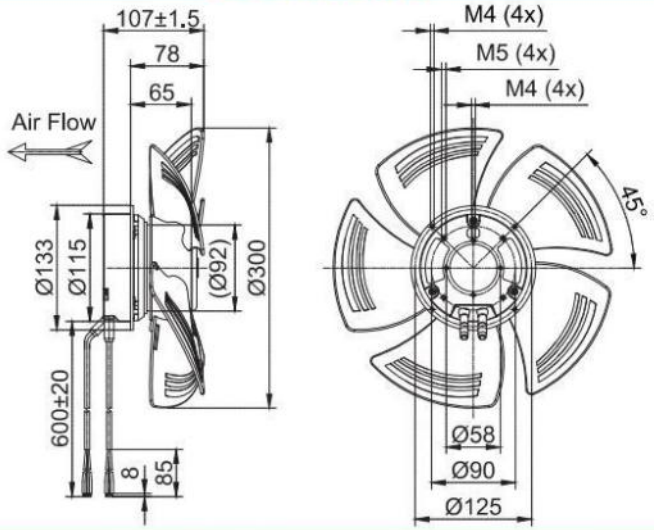

(带网罩的轴流风机Axial Fan With Guard Grille)
FG3G300-2APL-90

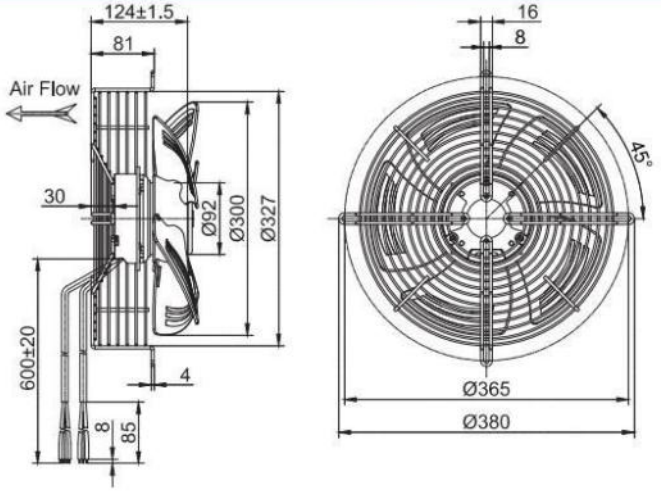

(带导风筒的轴流风机Axial Fan With Wall Ring)
FW3G300-2APC-90

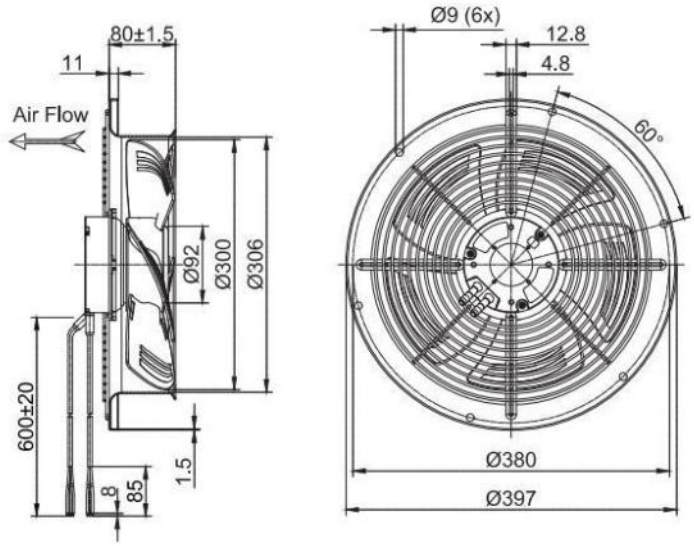



EC Axial Fans D350

- 材料**Material:** 塑料
  风轮**Impeller:** Plastic
  转子 Rotor: 电泳Electrophoresis
  端盖 Electronics housing: 压铸铝Die-cast aluminium
- 叶片数量**Number of blades:** 5
- 防护等级**Degree of protection:** IP 44/54
- 绝缘等级**Insulation class:** B
- 安装位置**Installation position:** 任意Any
- 模式**Mode:**连续工作制 Continuous operation (S1)

	电机 Motor	曲线 Curve	额定电压 Nominal Voltage	额定电压范围 Nominal Voltage Range	频率 Frequency	电流 Current	转速 Speed	输入功率 Max. input Power
Type			VAC	VAC	Hz	A	RPM	W
FG3G350-2APN-90	BLEC92	Ⓐ	230	184~270	50/60	1.15	1580	160
FG3G350-2APN-20	BLEC102	Ⓑ	230	184~270	50/60	2.0	2000	460

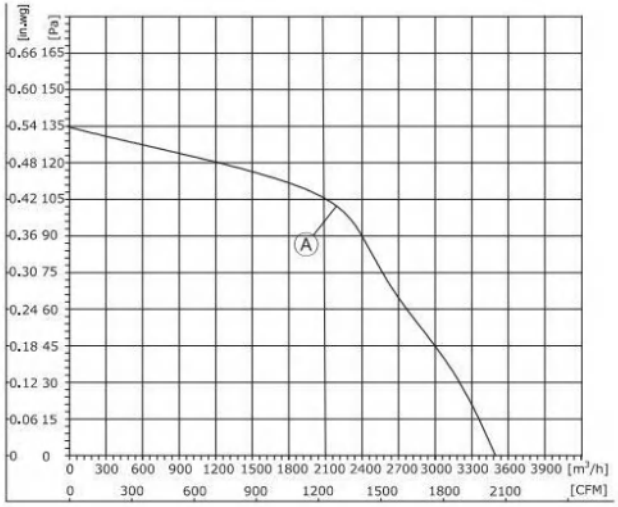

1、Air performance measured according to: ISO 5801, with DJ inlet ring without contact protection.
2、Intake-side sound level: LpA measured at 1 m distance from fan axis. The values given are only applicable under the specifi ed measuring conditions and may differ depending on the installation conditions.

EC Axial Fans D350

- 旋转方向**Direction of rotation:** 反转，从转子方向Anti-clockwise，viewed toward rotor
- 技术特性**Technical features:** 参见附图See connection diagram
- 泄漏电流**Touch curren:** < 3,5 mA
- 能效**Efficiency:** ErP2015
- 标准/证书**Valid For Approval/Standard**：CE,RoHS,ISO9001
  环境温度**Perm. ambient temp.**：.-25℃~+60℃
- 安装**Mounting:** 免维护滚珠轴承Maintenance-free ball bearings

噪音等级 Sound Pressure Level	风量 Air Flow	风压 Air Pressure			速度控制 Speed Control	接线图 Wiring Mode
dB(A)	m³/h	Pa	with guard grille	with wall ring		
63	3500	135	FG3G350-2APL-90	FW3G350-2APC-90	0-10VDC PWM RS-485	F2
80	4650	275	FG3G350-2APL-20	FW3G350-2APC-20		F3,F5

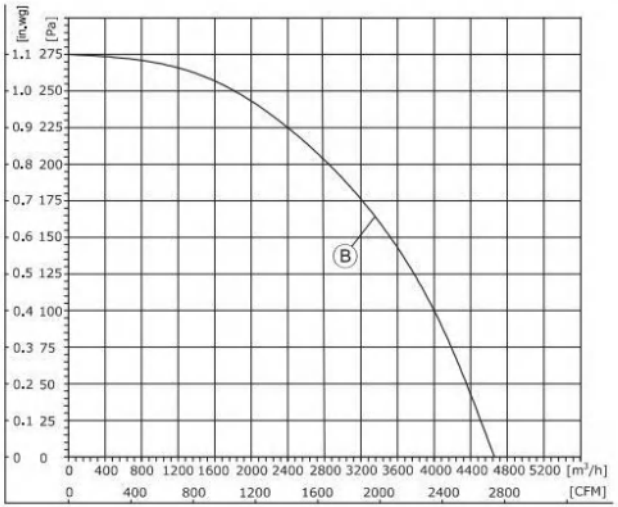

1、Air performance measured according to: ISO 5801, with DJ inlet ring without contact protection.
2、Intake-side sound level: LpA measured at 1 m distance from fan axis. The values given are only applicable under the specifi ed measuring conditions and may differ depending on the installation conditions.

(轴流风机Axial Fan)
FG3G350-2APN-90

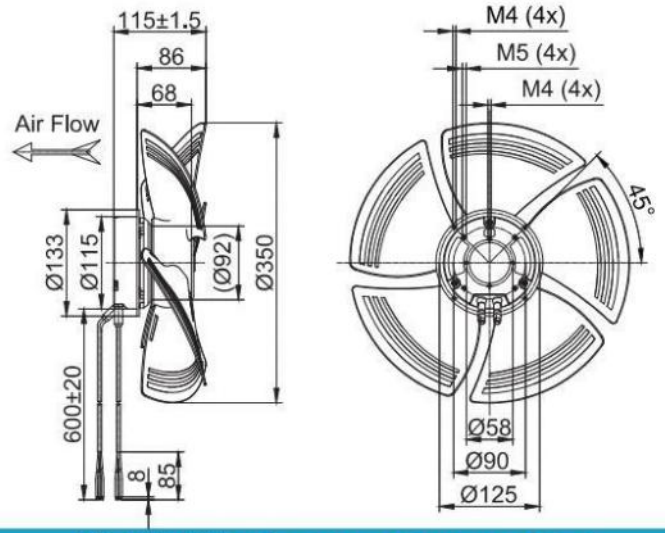

(带网罩的轴流风机Axial Fan With Guard Grille)
FG3G350-2APL-90

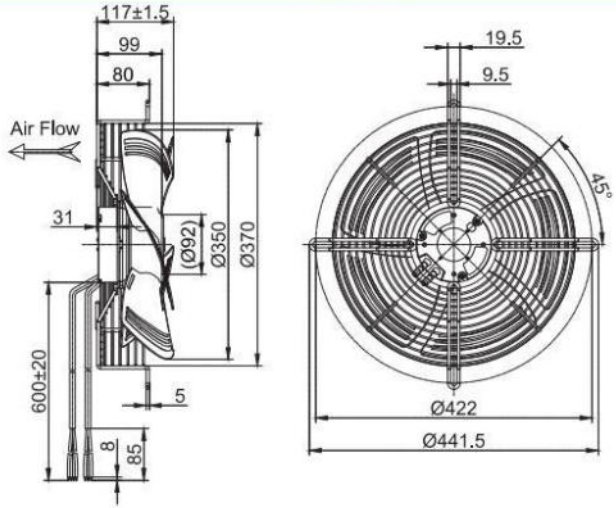

(带导风筒的轴流风机Axial Fan With Wall Ring)
FW3G350-2APC-90

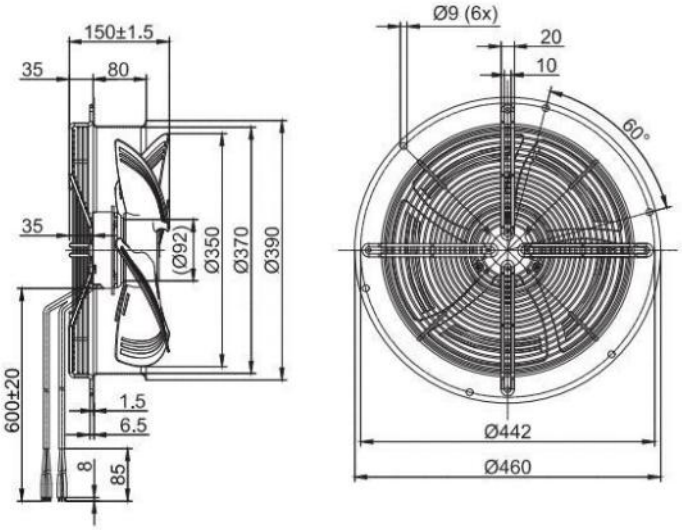

(轴流风机Axial Fan)
FG3G350-2APN-20

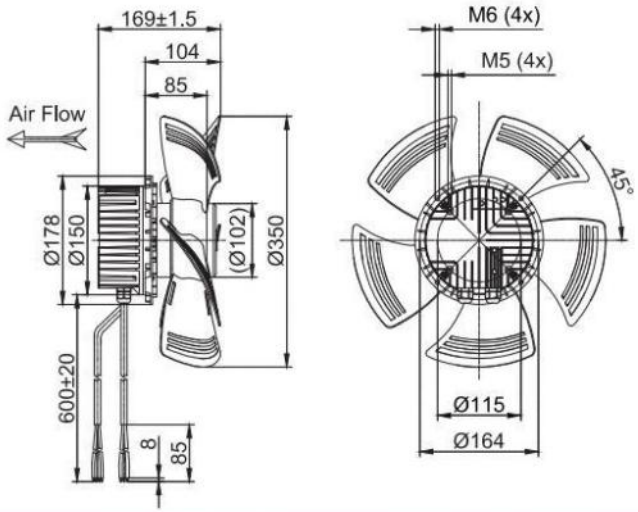

(带网罩的轴流风机Axial Fan With Guard Grille)
FG3G350-2APL-20

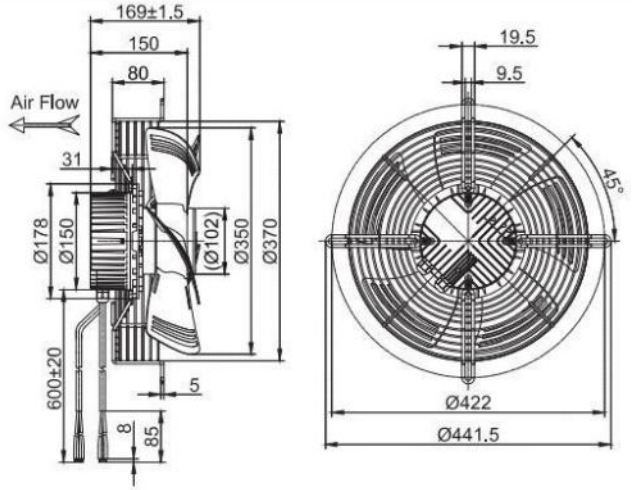

(带导风筒的轴流风机Axial Fan With Wall Ring)
FW3G350-2APC-20

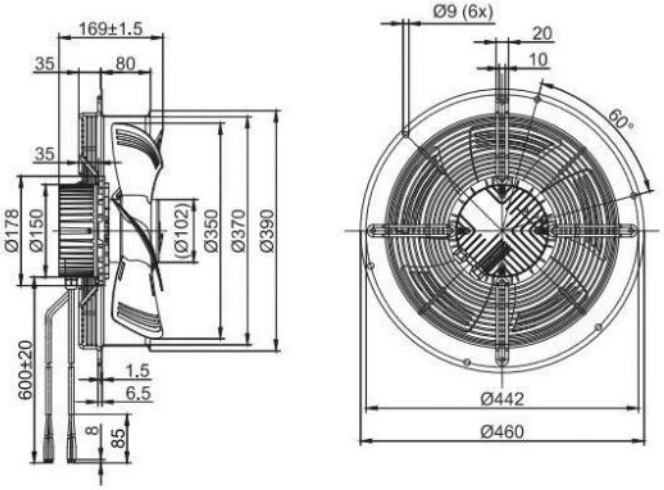



EC Axial Fans D400

- 材料**Material:** 塑料
  风轮**Impeller:** Plastic
  转子 Rotor: 电泳Electrophoresis
  端盖 Electronics housing: 压铸铝Die-cast aluminium
- 叶片数量**Number of blades:** 5
- 防护等级**Degree of protection:** IP 54
- 绝缘等级**Insulation class:** B
- 安装位置**Installation position:** 任意Any
- 模式**Mode:**连续工作制 Continuous operation (S1)

	电机 **Motor**	曲线 **Curve**	额定电压 **Nominal Voltage**	额定电压范围 **Nominal Voltage Range**	频率 **Frequency**	电流 **Current**	转速 **Speed**	输入功率 **Max. Input Power**
Type			VAC	VAC	Hz	A	RPM	W
FG3G400-2APN-20	BLEC102	Ⓐ	230	184~270	50/60	2.18	1760	500

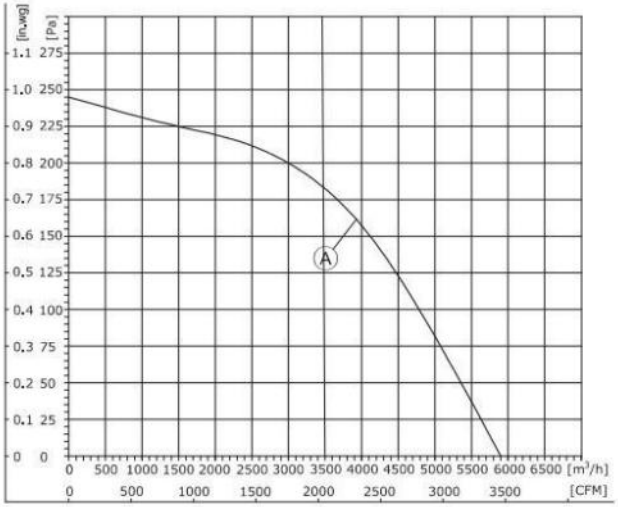

1、Air performance measured according to: ISO 5801, with DJ inlet ring without contact protection.
2、Intake-side sound level: LpA measured at 1 m distance from fan axis. The values given are only applicable under the specifi ed measuring conditions and may differ depending on the installation conditions.

EC Axial Fans D400

- 旋转方向**Direction of rotation:** 反转，从转子方向Anti-clockwise，viewed toward rotor
- 技术特性**Technical features:** 参见附图See connection diagram
- 泄漏电流**Touch curren:** < 3,5 mA
- 能效**Efficiency:** ErP2015
- 标准/证书**Valid For Approval/Standard**：CE,RoHS,ISO9001
  环境温度**Perm. ambient temp.**：-25℃~+60℃
- 安装**Mounting:** 免维护滚珠轴承Maintenance-free ball bearings

噪音等级 **Sound Pressure Level**	风量 **Air Flow**	风压 **Air Pressure**			速度控制 **Speed Control**	接线图 **Wiring Mode**
dB(A)	m³/h	Pa	with guard grille	with wall ring		
79	5900	240	FG3G400-2APL-20	FW3G400-2APF-20	0-10VDC PWM RS-485	F3,F5

(轴流风机Axial Fan)
FG3G400-2APN-20

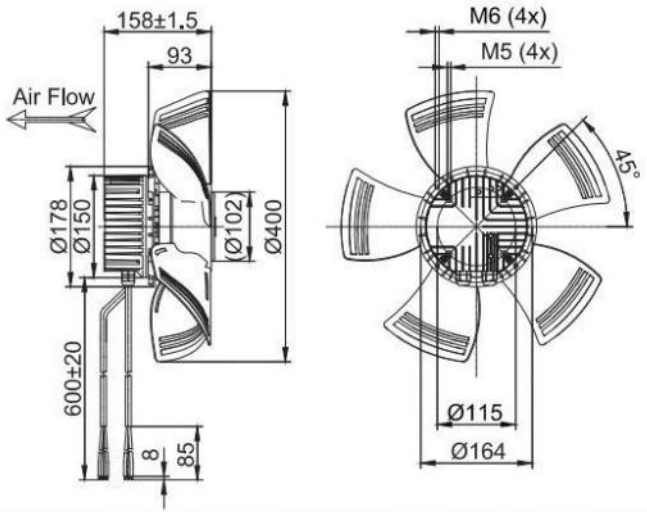

(带网罩的轴流风机Axial Fan With Guard Grille)
FG3G400-2APL-20

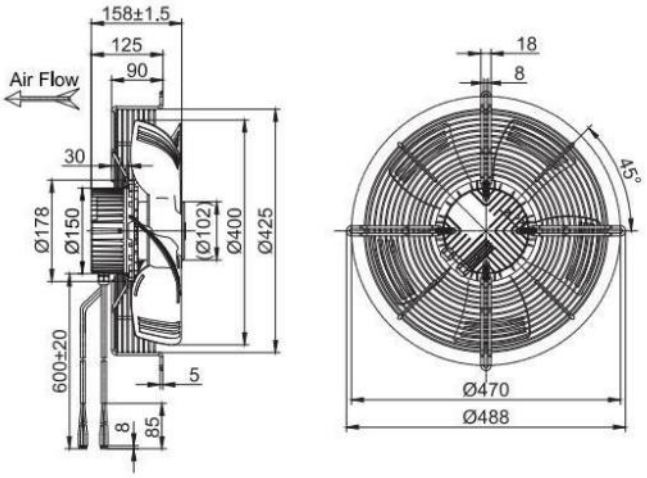

(带导风筒的轴流风机Axial Fan With Wall Ring)
FW3G400-2APF-20

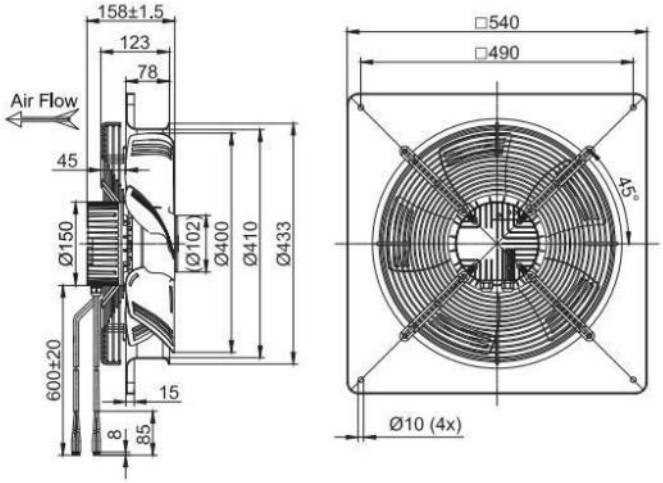



EC Axial Fans D450

- 材料**Material:** 塑料
  风轮**Impeller:** Plastic
  转子 Rotor: 电泳Electrophoresis
  端盖 Electronics housing: 压铸铝Die-cast aluminium
- 叶片数量**Number of blades:** 5
- 防护等级**Degree of protection:** IP 54
- 绝缘等级**Insulation class:** B
- 安装位置**Installation position:** 任意Any
- 模式**Mode:**连续工作制 Continuous operation (S1)

	电机 **Motor**	曲线 **Curve**	额定电压 **Nominal Voltage**	额定电压范围 **Nominal Voltage Range**	频率 **Frequency**	电流 **Current**	转速 **Speed**	输入功率 **Max. input Power**
Type			VAC	VAC	Hz	A	RPM	W
FG3G450-2APN-20	BLEC102	Ⓐ	230	184~270	50/60	1.9	1600	420

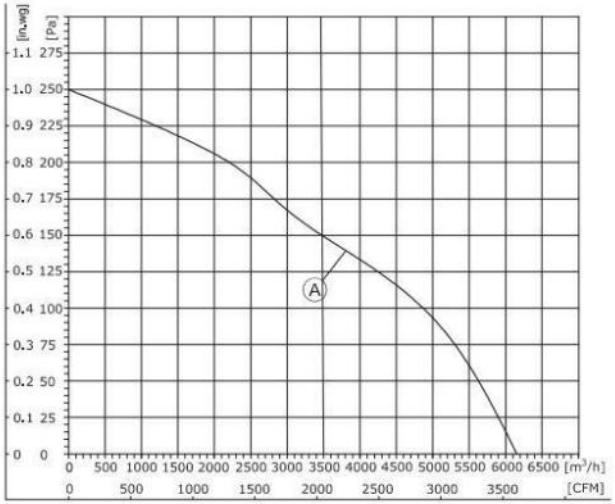

1、Air performance measured according to: ISO 5801, with DJ inlet ring without contact protection.
2、Intake-side sound level: LpA measured at 1 m distance from fan axis. The values given are only applicable under the specifi ed measuring conditions and may differ depending on the installation conditions.

EC Axial Fans D450

- 旋转方向**Direction of rotation:** 反转，从转子方向Anti-clockwise，viewed toward rotor
- 技术特性**Technical features:** 参见附图See connection diagram
- 泄漏电流**Touch curren:** < 3,5 mA
- 能效**Efficiency:** ErP2015
- 标准/证书**Valid For Approval/Standard**：CE,RoHS,ISO9001
  环境温度**Perm. ambient temp.**：-25℃~+60℃
- 安装**Mounting:** 免维护滚珠轴承Maintenance-free ball bearings

噪音等级 **Sound Pressure Level**	风量 **Air Flow**	风压 **Air Pressure**			速度控制 **Speed Control**	接线图 **Wiring Mode**
dB(A)	m³/h	Pa	with guard grille	with wall ring		
68	6150	250	FG3G450-2APL-20	FW3G450-2APF-20	0-10VDC PWM RS-485	F3,F5

(轴流风机Axial Fan)
FG3G450-2APN-20

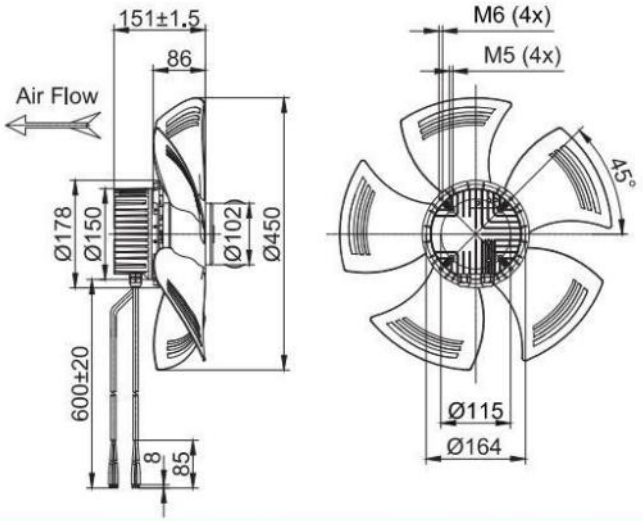

(带网罩的轴流风机Axial Fan With Guard Grille)
FG3G450-2APL-20

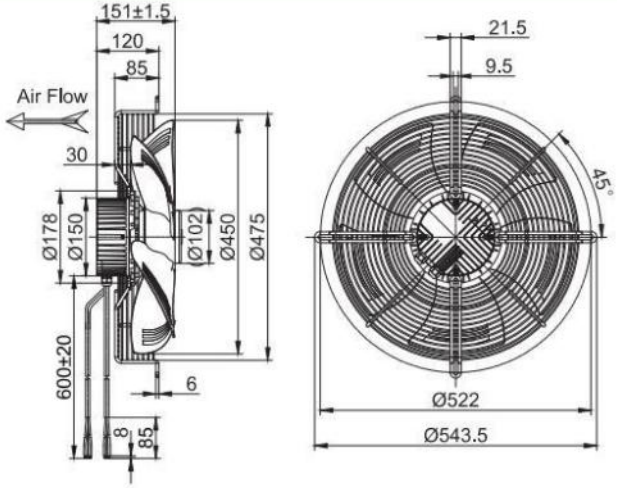

(带导风筒的轴流风机Axial Fan With Wall Ring)
FW3G450-2APF-20

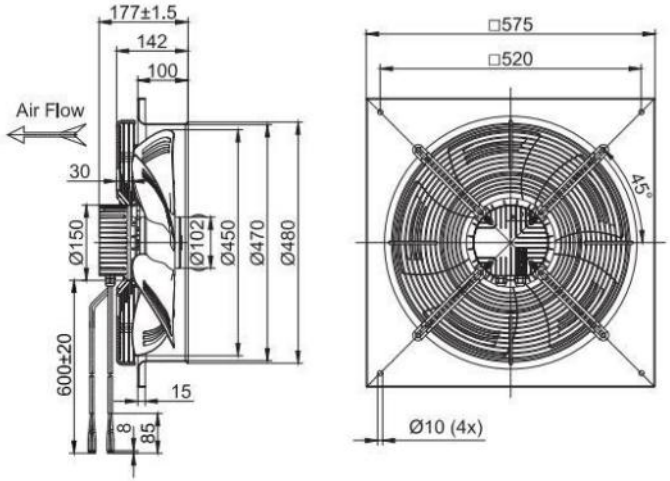



EC Axial Fans D500

- 材料**Material:** 塑料
  风轮**Impeller:** Plastic
  转子 Rotor: 电泳Electrophoresis
  端盖 Electronics housing: 压铸铝Die-cast aluminium
- 叶片数量**Number of blades:** 5
- 防护等级**Degree of protection:** IP 54
- 绝缘等级**Insulation class:** B/F
- 安装位置**Installation position:** 任意Any
- 模式**Mode:**连续工作制 Continuous operation (S1)

	电机 Motor	曲线 Curve	额定电压 Nominal Voltage	额定电压范围 Nominal Voltage Range	频率 Frequency	电流 Current	转速 Speed	输入功率 Max. input Power
Type			VAC	VAC	Hz	A	RPM	W
FG3G500-2APN-20	BLEC102	Ⓐ	230	184~270	50/60	2.0	1250	450
FG3G500-2APN-30	BLEC137	Ⓑ	230	184~270	50/60	3.1	1550	700
FG3G500-4APN-31	BLEC137	Ⓒ	380	304~456	50/60	1.5	1680	850

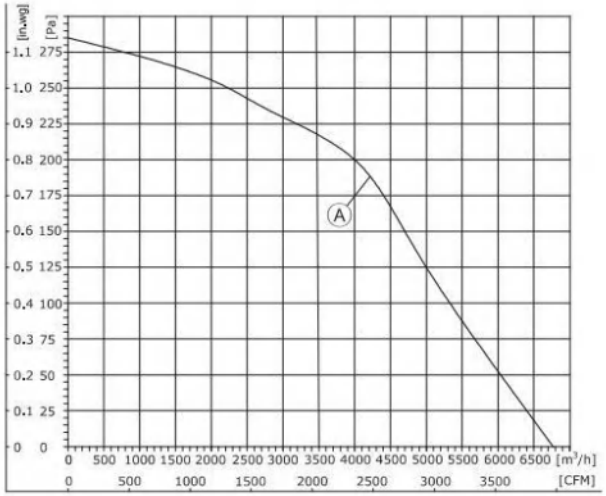

1、Air performance measured according to: ISO 5801, with DJ inlet ring without contact protection.
2、Intake-side sound level: LpA measured at 1 m distance from fan axis. The values given are only applicable under the specifi ed measuring conditions and may differ depending on the installation conditions.

EC Axial Fans D500

- 旋转方向**Direction of rotation:** 反转，从转子方向Anti-clockwise，viewed toward rotor
- 技术特性**Technical features:** 参见附图See connection diagram
- 泄漏电流**Touch curren:** < 3,5 mA
- 能效**Efficiency:** ErP2015
- 标准/证书**Valid For Approval/Standard**：CE,RoHS,ISO9001
  环境温度**Perm. ambient temp.**：.-25℃~+60℃
- 安装**Mounting:** 免维护滚珠轴承Maintenance-free ball bearings

噪音等级 Sound Pressure Level	风量 Air Flow	风压 Air Pressure		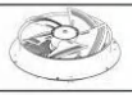	速度控制 Speed Control	接线图 Wiring Mode
dB(A)	m³/h	Pa	with guard grille	with wall ring		
71	6781	285	FG3G500-2APL-20	FW3G500-2APF-20	0-10VDC PWM RS-485	F3,F5
74	8750	250	FG3G500-2APL-30	FW3G500-2APF-30		F7
78.4	10400	300	FG3G500-4APL-31	FW3G500-4APF-31		F8

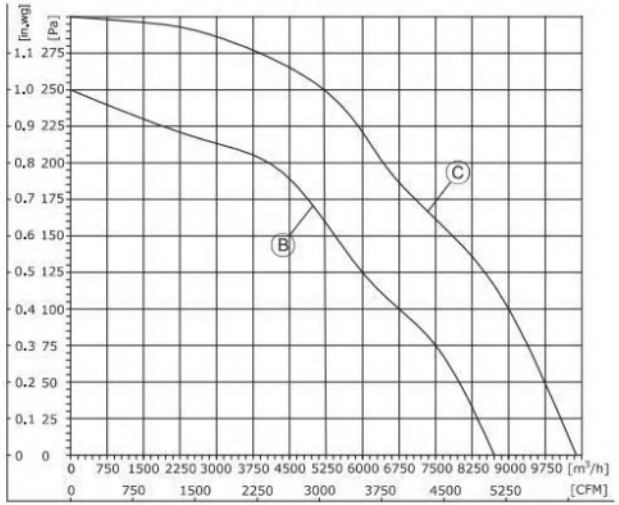

1、Air performance measured according to: ISO 5801, with DJ inlet ring without contact protection.
2、Intake-side sound level: LpA measured at 1 m distance from fan axis. The values given are only applicable under the specifi ed measuring conditions and may differ depending on the installation conditions.

(轴流风机Axial Fan)
FG3G500-2APN-20

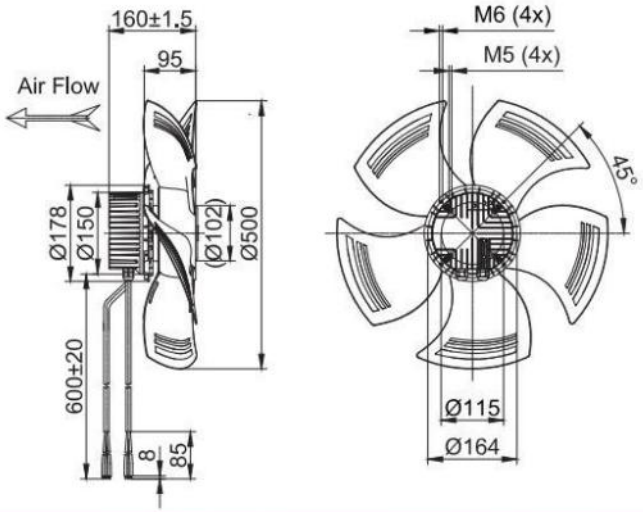

(带网罩的轴流风机Axial Fan With Guard Grille)
FG3G500-2APL-20

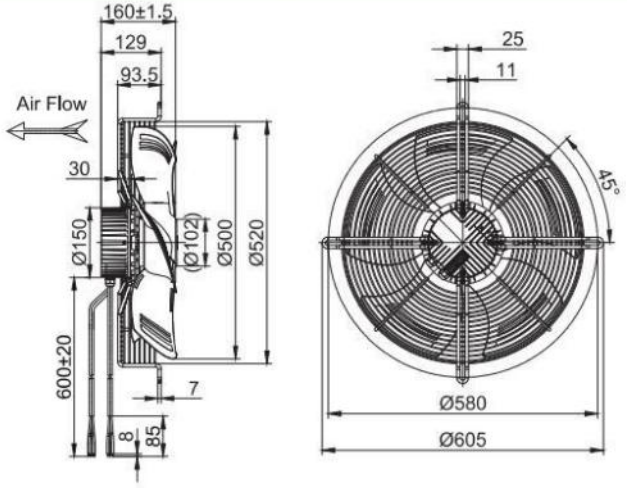

(带导风筒的轴流风机Axial Fan With Wall Ring)
FW3G500-2APF-20

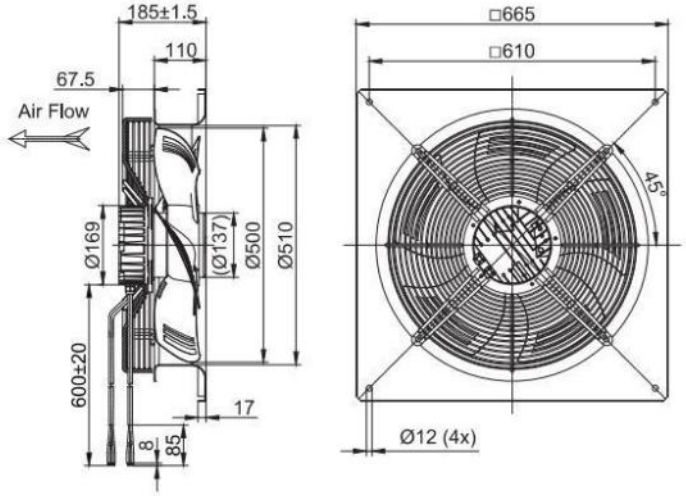

(轴流风机Axial Fan)
FG3G500-2APN-30

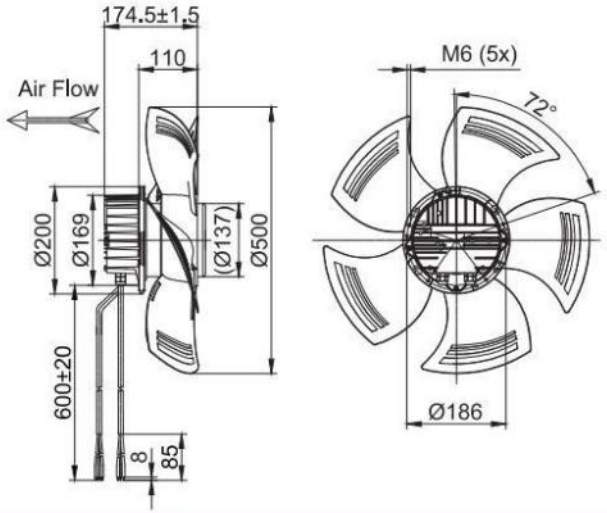

(带网罩的轴流风机Axial Fan With Guard Grille)
FG3G500-2APL-30

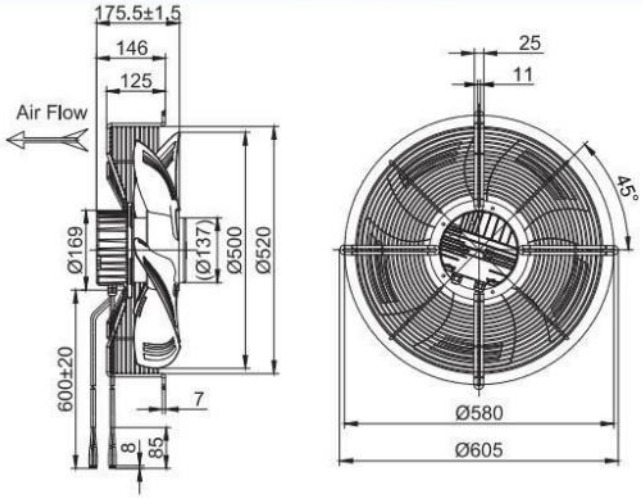

(带导风筒的轴流风机Axial Fan With Wall Ring)
FW3G500-2APF-30

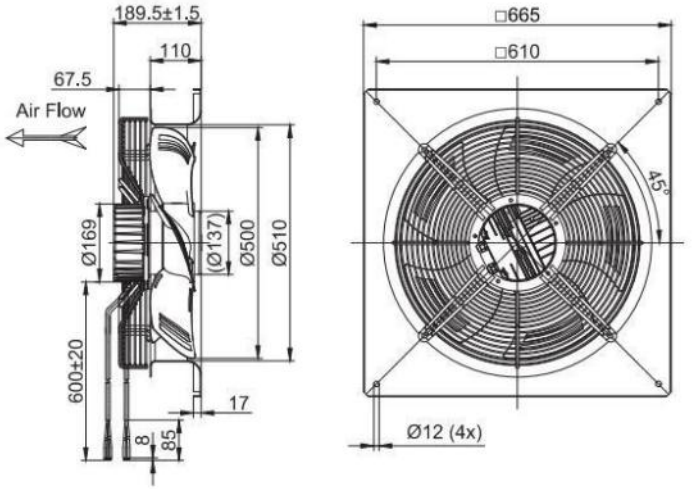

(轴流风机Axial Fan)
FG3G500-4APN-31

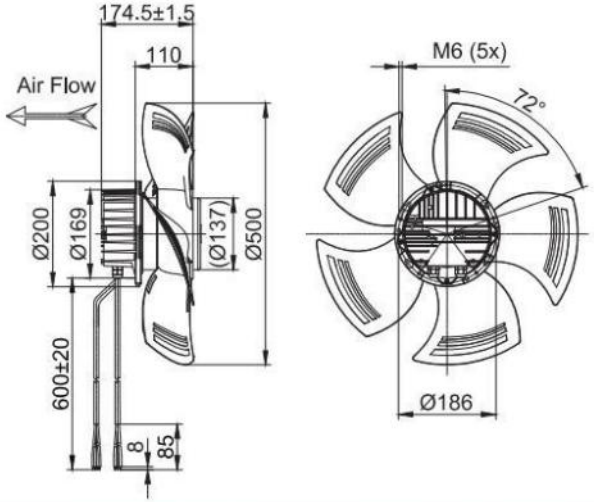

(带网罩的轴流风机Axial Fan With Guard Grille)
FG3G500-4APL-31

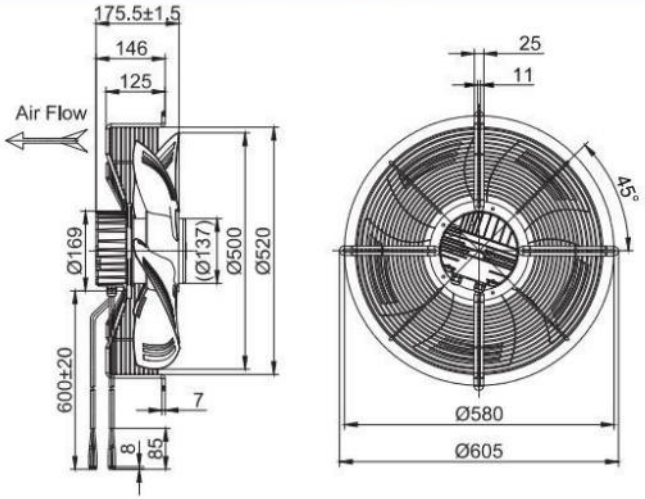

(带导风筒的轴流风机Axial Fan With Wall Ring)
FW3G500-4APF-31

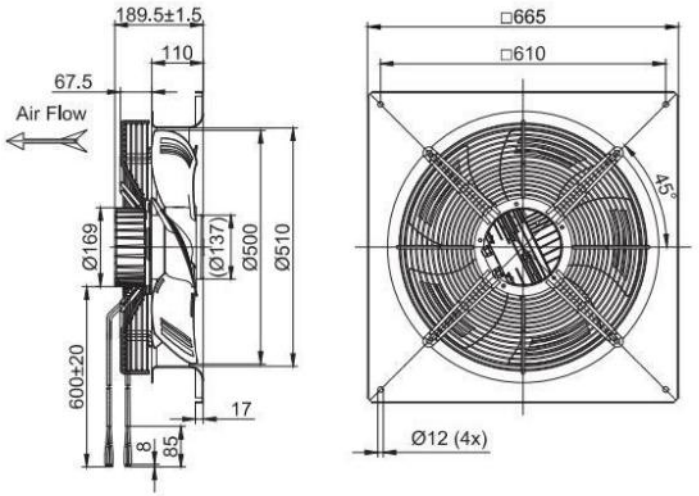

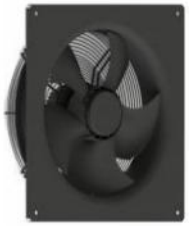

EC Axial Fans D630

- 材料**Material:** 塑料
  风轮**Impeller:** Plastic
  转子 Rotor: 电泳Electrophoresis
  端盖 Electronics housing: 压铸铝Die-cast aluminium
- 叶片数量**Number of blades:** 5
- 防护等级**Degree of protection:** IP 54
- 绝缘等级**Insulation class:** F
- 安装位置**Installation position:** 任意Any
- 模式**Mode:**连续工作制 Continuous operation (S1)

	电机 **Motor**	曲线 **Curve**	额定电压 **Nominal Voltage**	额定电压范围 **Nominal Voltage Range**	频率 **Frequency**	电流 **Current**	转速 **Speed**	输入功率 **Max. input Power**
Type			VAC	VAC	Hz	A	RPM	W
FG3G630-4APN-31	BLEC137	Ⓐ	380	304~456	50/60	1.3	1150	800

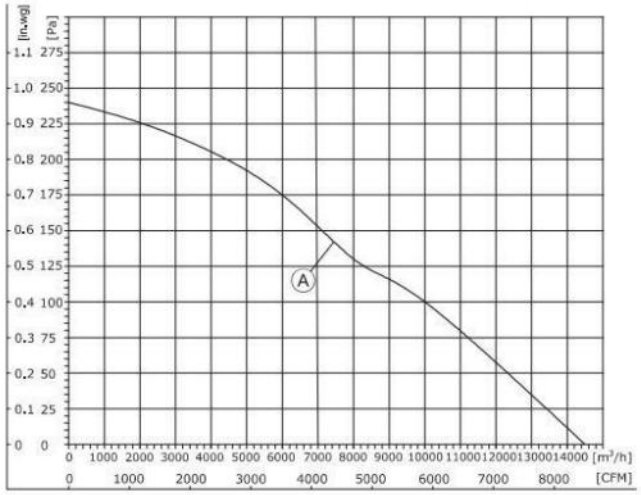

1、Air performance measured according to: ISO 5801, with DJ inlet ring without contact protection.
2、Intake-side sound level: LpA measured at 1 m distance from fan axis. The values given are only applicable under the specifi ed measuring conditions and may differ depending on the installation conditions.

EC Axial Fans D630

- 旋转方向**Direction of rotation:** 反转，从转子方向Anti-clockwise，viewed toward rotor
- 技术特性**Technical features:** 参见附图See connection diagram
- 泄漏电流**Touch curren:** < 3,5 mA
- 能效**Efficiency:** ErP2015
- 标准/证书**Valid For Approval/Standard**：CE,RoHS,ISO9001
  环境温度**Perm. ambient temp.**：-25℃~+60℃
- 安装**Mounting:** 免维护滚珠轴承Maintenance-free ball bearings

噪音等级 **Sound Pressure Level**	风量 **Air Flow**	风压 **Air Pressure**			速度控制 **Speed Control**	接线图 **Wiring Mode**
dB(A)	m³/h	Pa	with guard grille	with wall ring		
69	14500	240	FG3G630-4APL-31	FW3G630-4APF-31	0-10VDC PWM RS-485	F8

(轴流风机Axial Fan)
FG3G630-4APN-31

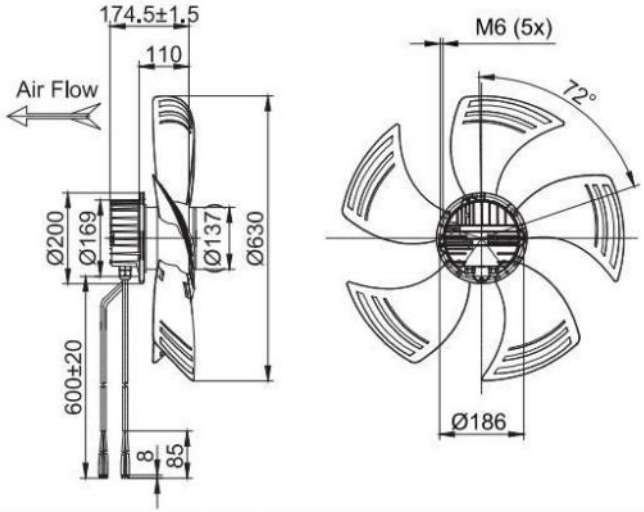

(带网罩的轴流风机Axial Fan With Guard Grille)
FG3G630-4APL-31

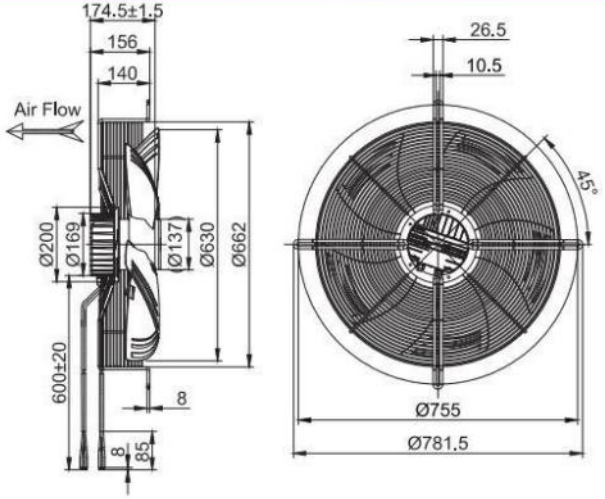

(带导风筒的轴流风机Axial Fan With Wall Ring)
FW3G630-4APF-31

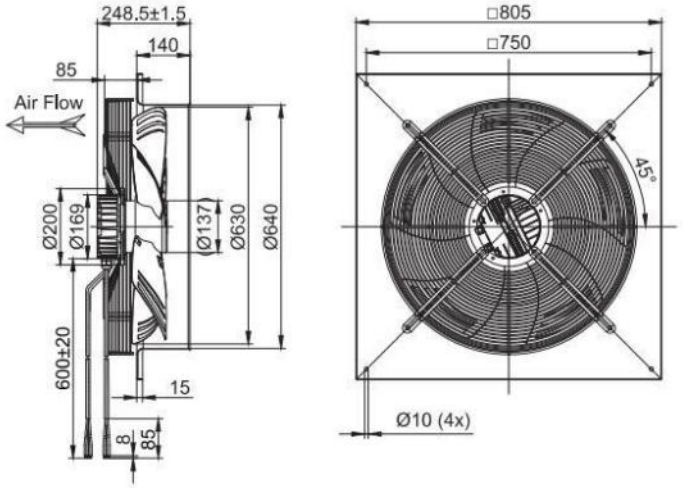



EC Single Inlet Centrifugal Blower D108

- 材料**Material:** 镀锌钢板
  风轮**Impeller:** Galvanized steel plate
  转子 Rotor: 电泳Electrophoresis
  端盖 Electronics housing: 压铸铝Die-cast aluminium
- 叶片数量**Number of blades:** 34
- 防护等级**Degree of protection:** IP 44
- 绝缘等级**Insulation class:** B
- 安装位置**Installation position:** 任意Any
- 模式**Mode:**连续工作制 Continuous operation (S1)

	电机 **Motor**	曲线 **Curve**	额定电压 **Nominal Voltage**	额定电压范围 **Nominal Voltage Range**	频率 **Frequency**	电流 **Current**	转速 **Speed**	输入功率 **Max. input Power**
Type			VAC	VAC	Hz	A	RPM	W
FF3G108-2AGL-70	BLEC72	Ⓐ	230	184~270	50/60	0.38	2800	50

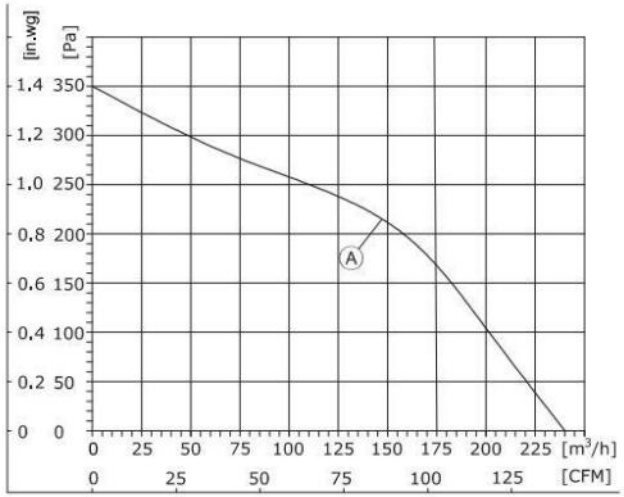

1、Air performance measured according to: ISO 5801, with DJ inlet ring without contact protection.
2、Intake-side sound level: LpA measured at 1 m distance from fan axis. The values given are only applicable under the specifi ed measuring conditions and may differ depending on the installation conditions.

EC Single Inlet Centrifugal Blower D108

- 旋转方向**Direction of rotation:** 正转，从转子方向Clockwise，viewed toward rotor
- 技术特性**Technical features:** 参见附图See connection diagram
- 泄漏电流**Touch curren:** < 3,5 mA
- 能效**Efficiency:** ErP2015
- 标准/证书**Valid For Approval/Standard**：CE,RoHS,ISO9001
  环境温度**Perm. ambient temp.**：-25℃~+60℃
- 安装**Mounting:** 免维护滚珠轴承Maintenance-free ball bearings

噪音等级 **Sound Pressure Level**	风量 **Air Flow**	风压 **Air Pressure**	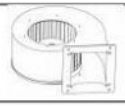	速度控制 **Speed Control**	接线图 **Wiring Mode**
dB(A)	m³/h	Pa	with scroll housing		
64	240	350	FS3G108-2AGL-70	0-10VDC PWM	F1

(前向离心风机Forward Centrifugal Blower Without Scroll Housing)
FF3G108-2AGL-70

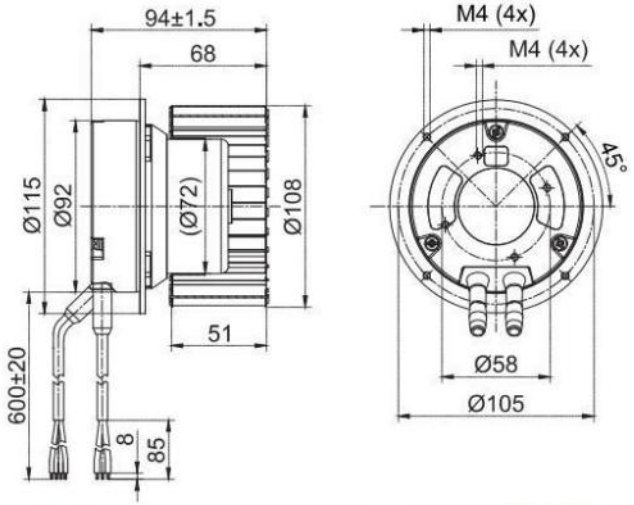

(单进风鼓风机Single Inlet Centrifugal Blower With Scroll Housing)
FS3G108-2AGL-70

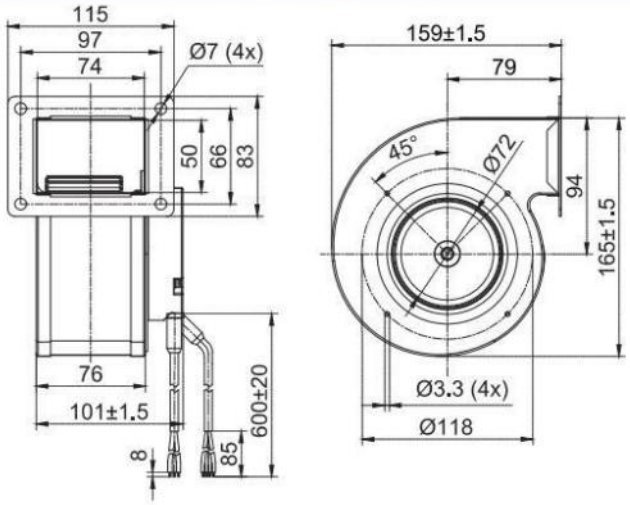



EC Single Inlet Centrifugal Blower D120

- 材料**Material:** 镀锌钢板
  风轮**Impeller:** Galvanized steel plate
  转子 Rotor: 电泳Electrophoresis
  端盖 Electronics housing: 压铸铝Die-cast aluminium
- 叶片数量**Number of blades:** 34
- 防护等级**Degree of protection:** IP 44
- 绝缘等级**Insulation class:** B
- 安装位置**Installation position:** 任意Any
- 模式**Mode:**连续工作制 Continuous operation (S1)

	电机 **Motor**	曲线 **Curve**	额定电压 **Nominal Voltage**	额定电压范围 **Nominal Voltage Range**	频率 **Frequency**	电流 **Current**	转速 **Speed**	输入功率 **Max. input Power**
Type			VAC	VAC	Hz	A	RPM	W
FF3G120-2AGL-70	BLEC72	Ⓐ	230	184~270	50/60	0.48	2580	65

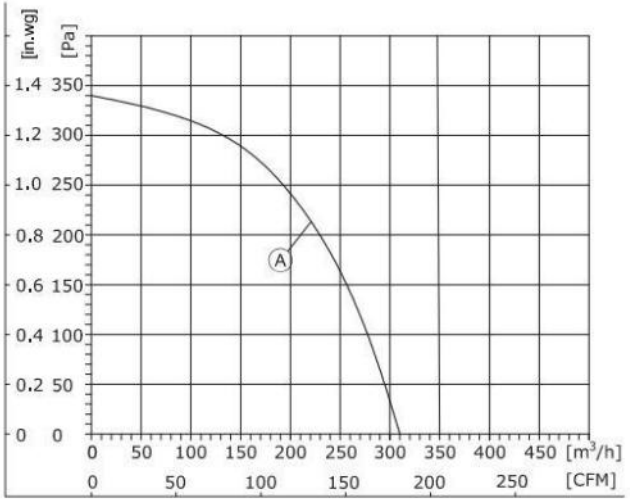

1、Air performance measured according to: ISO 5801, with DJ inlet ring without contact protection.
2、Intake-side sound level: LpA measured at 1 m distance from fan axis. The values given are only applicable under the specifi ed measuring conditions and may differ depending on the installation conditions.

EC Single Inlet Centrifugal Blower D120

- 旋转方向**Direction of rotation:** 正转，从转子方向Clockwise，viewed toward rotor
- 技术特性**Technical features:** 参见附图See connection diagram
- 泄漏电流**Touch curren:** < 3,5 mA
- 能效**Efficiency:** ErP2015
- 标准/证书**Valid For Approval/Standard**：CE,RoHS,ISO9001
  环境温度**Perm. ambient temp.**：-25℃~+60℃
- 安装**Mounting:** 免维护滚珠轴承Maintenance-free ball bearings

噪音等级 **Sound Pressure Level**	风量 **Air Flow**	风压 **Air Pressure**	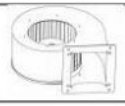	速度控制 **Speed Control**	接线图 **Wiring Mode**
dB(A)	m³/h	Pa	with scroll housing		
65	309	338	FS3G120-2AGL-70	0-10VDC PWM	F1

(前向离心风机Forward Centrifugal Blower Without Scroll Housing)
FF3G120-2AGL-70

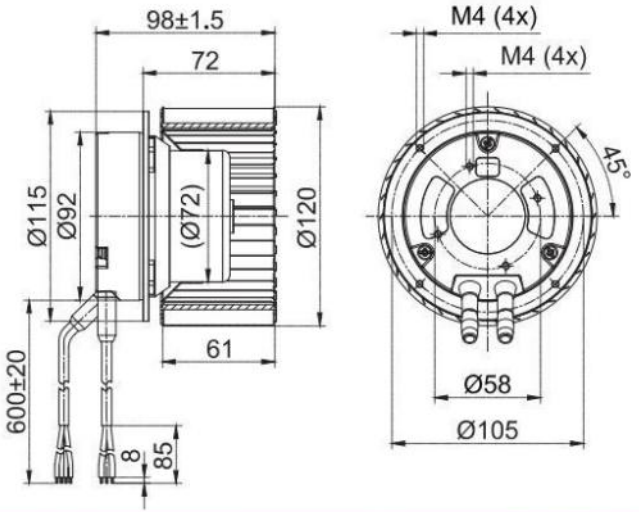

(单进风鼓风机Single Inlet Centrifugal Blower With Scroll Housing)
FS3G120-2AGL-70

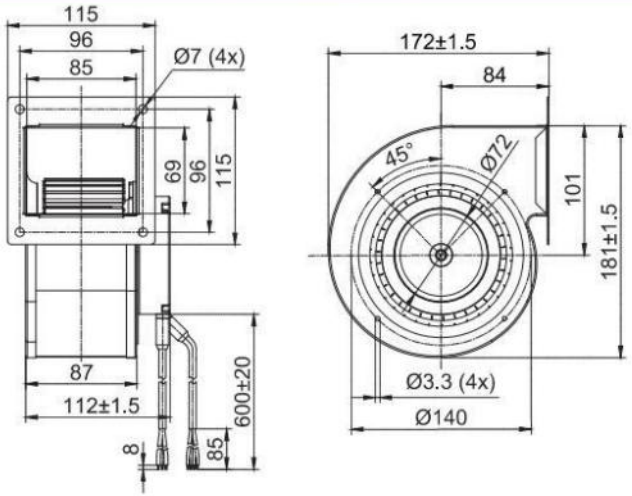



EC Single Inlet Centrifugal Blower D133

- 材料**Material:** 镀锌钢板
  风轮**Impeller:** Galvanized steel plate
  转子 Rotor: 电泳Electrophoresis
  端盖 Electronics housing: 压铸铝Die-cast aluminium
- 叶片数量**Number of blades:** 38
- 防护等级**Degree of protection:** IP 44
- 绝缘等级**Insulation class:** B
- 安装位置**Installation position:** 任意Any
- 模式**Mode:**连续工作制 Continuous operation (S1)

	电机 **Motor**	曲线 **Curve**	额定电压 **Nominal Voltage**	额定电压范围 **Nominal Voltage Range**	频率 **Frequency**	电流 **Current**	转速 **Speed**	输入功率 **Max. input Power**
Type			VAC	VAC	Hz	A	RPM	W
FF3G133-2AGL-70	BLEC72	Ⓐ	230	184~270	50/60	0.7	2600	82

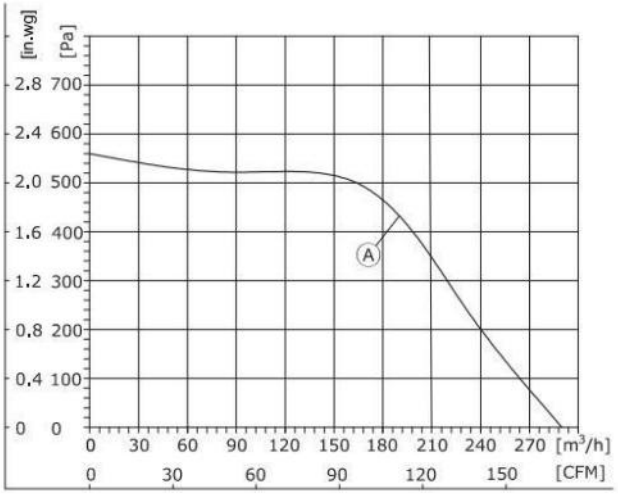

1、Air performance measured according to: ISO 5801, with DJ inlet ring without contact protection.
2、Intake-side sound level: LpA measured at 1 m distance from fan axis. The values given are only applicable under the specifi ed measuring conditions and may differ depending on the installation conditions.

EC Single Inlet Centrifugal Blower D133

- 旋转方向**Direction of rotation:** 正转，从转子方向Clockwise，viewed toward rotor
- 技术特性**Technical features:** 参见附图See connection diagram
- 泄漏电流**Touch curren:** < 3,5 mA
- 能效**Efficiency:** ErP2015
- 标准/证书**Valid For Approval/Standard**：CE,RoHS,ISO9001
  环境温度**Perm. ambient temp.**：-25℃~+60℃
- 安装**Mounting:** 免维护滚珠轴承Maintenance-free ball bearings

噪音等级 **Sound Pressure Level**	风量 **Air Flow**	风压 **Air Pressure**	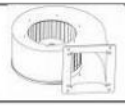	速度控制 **Speed Control**	接线图 **Wiring Mode**
dB(A)	m³/h	Pa	with scroll housing		
66	290	560	FS3G133-2AGL-70	0-10VDC PWM	F1

(前向离心风机Forward Centrifugal Blower Without Scroll Housing)
FF3G133-2AGL-70

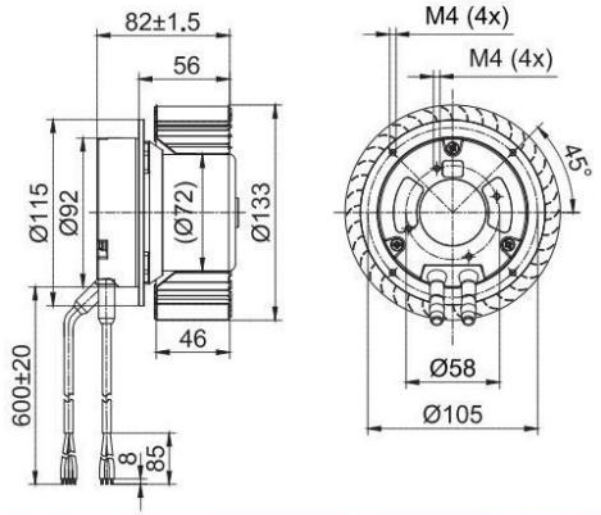

(单进风鼓风机Single Inlet Centrifugal Blower With Scroll Housing)
FS3G133-2AGL-70

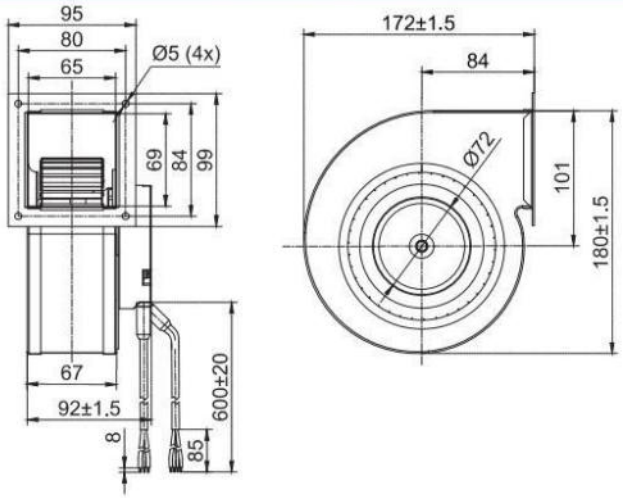



EC Single Inlet Centrifugal Blower D140

- 材料**Material:** 镀锌钢板
  风轮**Impeller:** Galvanized steel plate
  转子 Rotor: 电泳Electrophoresis
  端盖 Electronics housing: 压铸铝Die-cast aluminium
- 叶片数量**Number of blades:** 38
- 防护等级**Degree of protection:** IP 44
- 绝缘等级**Insulation class:** B
- 安装位置**Installation position:** 任意Any
- 模式**Mode:**连续工作制 Continuous operation (S1)

	电机 **Motor**	曲线 **Curve**	额定电压 **Nominal Voltage**	额定电压范围 **Nominal Voltage Range**	频率 **Frequency**	电流 **Current**	转速 **Speed**	输入功率 **Max. input Power**
Type			VAC	VAC	Hz	A	RPM	W
FF3G140-2AGL-90	BLEC92	Ⓐ	230	184~270	50/60	1.06	2580	150

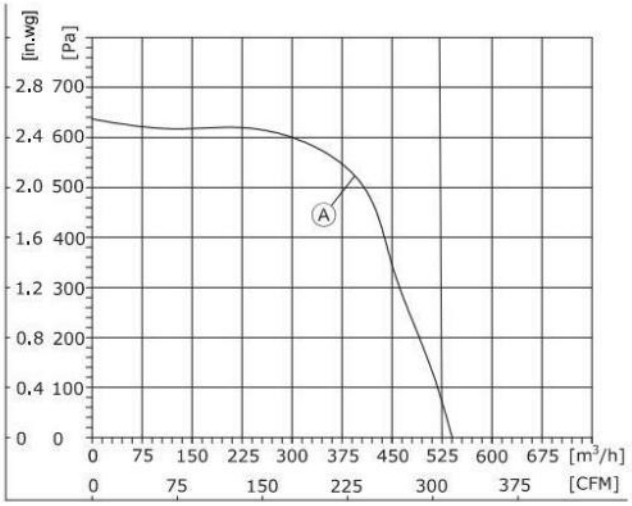

1、Air performance measured according to: ISO 5801, with DJ inlet ring without contact protection.
2、Intake-side sound level: LpA measured at 1 m distance from fan axis. The values given are only applicable under the specifi ed measuring conditions and may differ depending on the installation conditions.

EC Single Inlet Centrifugal Blower D140

- 旋转方向**Direction of rotation:** 正转，从转子方向Clockwise，viewed toward rotor
- 技术特性**Technical features:** 参见附图See connection diagram
- 泄漏电流**Touch curren:** < 3,5 mA
- 能效**Efficiency:** ErP2015
- 标准/证书**Valid For Approval/Standard:** CE,RoHS,ISO9001
  环境温度**Perm. ambient temp.:** -25℃~+60℃
- 安装**Mounting:** 免维护滚珠轴承Maintenance-free ball bearings

噪音等级 **Sound Pressure Level**	风量 **Air Flow**	风压 **Air Pressure**	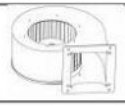	速度控制 **Speed Control**	接线图 **Wiring Mode**
dB(A)	m³/h	Pa	with scroll housing		
70	543	636	FS3G140-2AGL-90	0-10VDC PWM RS-485	F2

EC Blowers

(前向离心风机Forward Centrifugal Blower Without Scroll Housing)
FF3G140-2AGL-90

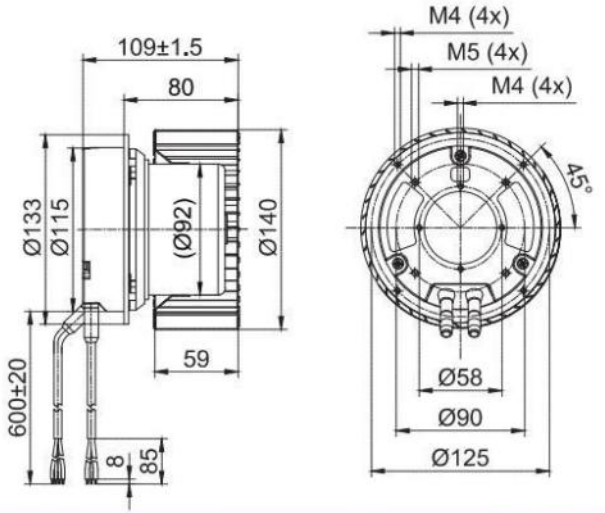

(单进风鼓风机Single Inlet Centrifugal Blower With Scroll Housing)
FS3G140-2AGL-90

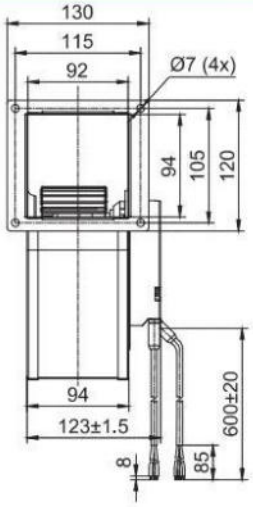

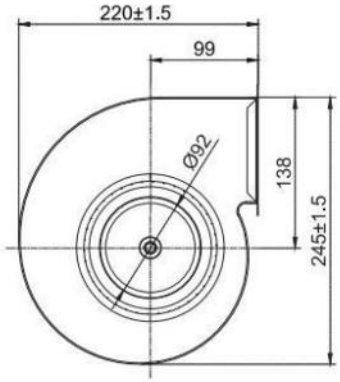

EC Centrifugal Blowers



EC Single Inlet Centrifugal Blower D160

- 材料**Material:** 镀锌钢板
  风轮**Impeller:** Galvanized steel plate
  转子 Rotor: 电泳Electrophoresis
  端盖 Electronics housing: 压铸铝Die-cast aluminium
- 叶片数量**Number of blades:** 38
- 防护等级**Degree of protection:** IP 44
- 绝缘等级**Insulation class:** B
- 安装位置**Installation position:** 任意Any
- 模式**Mode:**连续工作制 Continuous operation (S1)

	电机 **Motor**	曲线 **Curve**	额定电压 **Nominal Voltage**	额定电压范围 **Nominal Voltage Range**	频率 **Frequency**	电流 **Current**	转速 **Speed**	输入功率 **Max. input Power**
Type			VAC	VAC	Hz	A	RPM	W
FF3G160-2AGL-90	BLEC92	Ⓐ	230	184~270	50/60	1.06	2050	150

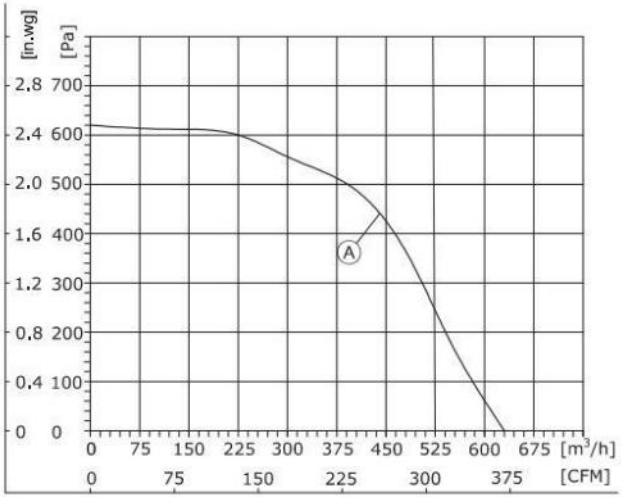

1、Air performance measured according to: ISO 5801, with DJ inlet ring without contact protection.
2、Intake-side sound level: LpA measured at 1 m distance from fan axis. The values given are only applicable under the specifi ed measuring conditions and may differ depending on the installation conditions.

EC Single Inlet Centrifugal Blower D160

- 旋转方向**Direction of rotation:** 正转，从转子方向Clockwise，viewed toward rotor
- 技术特性**Technical features:** 参见附图See connection diagram
- 泄漏电流**Touch curren:** < 3,5 mA
- 能效**Efficiency:** ErP2015
- 标准/证书**Valid For Approval/Standard:** CE,RoHS,ISO9001
  环境温度**Perm. ambient temp.:** -25℃~+60℃
- 安装**Mounting:** 免维护滚珠轴承Maintenance-free ball bearings

噪音等级 **Sound Pressure Level**	风量 **Air Flow**	风压 **Air Pressure**	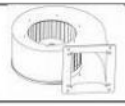	速度控制 **Speed Control**	接线图 **Wiring Mode**
dB(A)	m³/h	Pa	with scroll housing		
71	630	620	FS3G160-2AGL-90	0-10VDC PWM RS-485	F2

(前向离心风机Forward Centrifugal Blower Without Scroll Housing)
FF3G160-2AGL-90

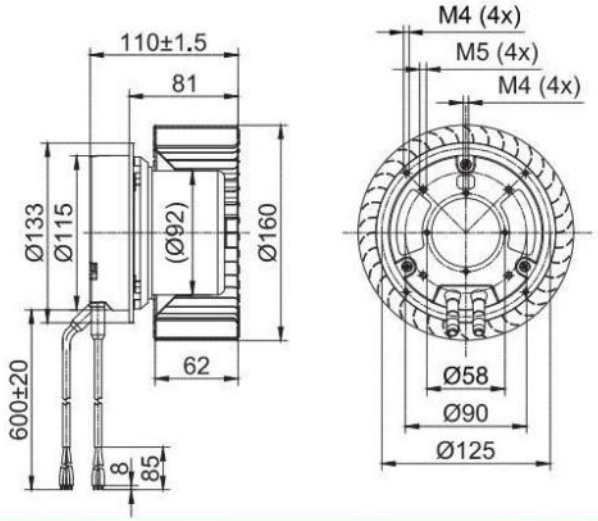

(单进风鼓风机Single Inlet Centrifugal Blower With Scroll Housing)
FS3G160-2AGL-90

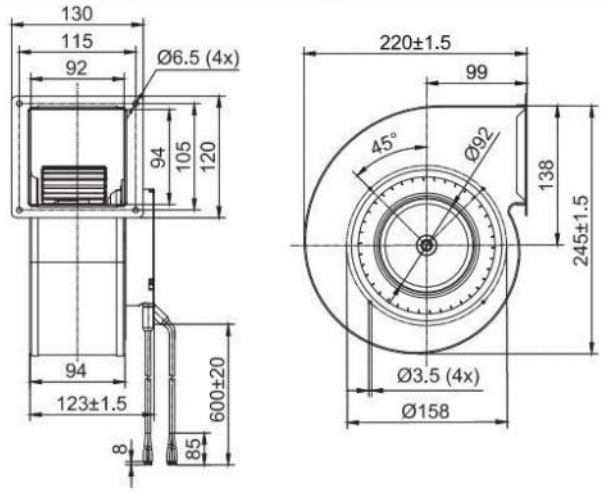



EC Single Inlet Centrifugal Blower D180

- 材料**Material:** 镀锌钢板
  风轮**Impeller:** Galvanized steel plate
  转子 Rotor: 电泳Electrophoresis
  端盖 Electronics housing: 压铸铝Die-cast aluminium
- 叶片数量**Number of blades:** 38
- 防护等级**Degree of protection:** IP 44/45
- 绝缘等级**Insulation class:** B
- 安装位置**Installation position:** 任意Any
- 模式**Mode:**连续工作制 Continuous operation (S1)

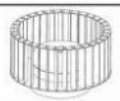	电机 **Motor**	曲线 **Curve**	额定电压 **Nominal Voltage**	额定电压范围 **Nominal Voltage Range**	频率 **Frequency**	电流 **Current**	转速 **Speed**	输入功率 **Max. input Power**
Type			VAC	VAC	Hz	A	RPM	W
FF3G180-2AGL-90	BLEC92	Ⓐ	230	184~270	50/60	1.35	1600	200
FF3G180-2AGL-20	BLEC92	Ⓑ	230	184~270	50/60	2.2	2460	495

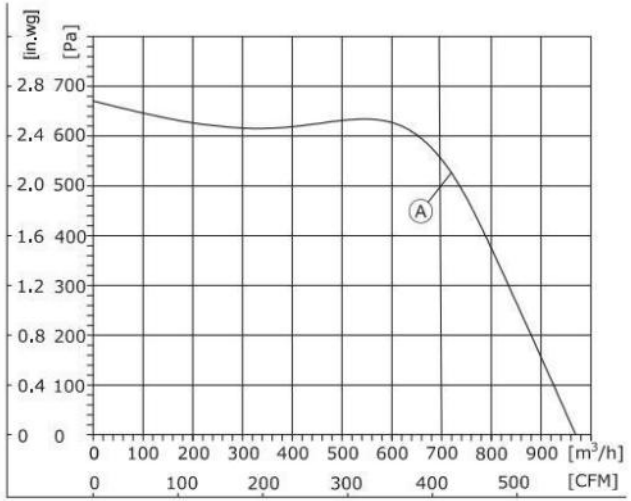

1、Air performance measured according to: ISO 5801, with DJ inlet ring without contact protection.
2、Intake-side sound level: LpA measured at 1 m distance from fan axis. The values given are only applicable under the specifi ed measuring conditions and may differ depending on the installation conditions.

EC Single Inlet Centrifugal Blower D180

- 旋转方向**Direction of rotation:** 正转，从转子方向Clockwise，viewed toward rotor
- 技术特性**Technical features:** 参见附图See connection diagram
- 泄漏电流**Touch curren:** < 3,5 mA
- 能效**Efficiency:** ErP2015
- 标准/证书**Valid For Approval/Standard:** CE,RoHS,ISO9001
  环境温度**Perm. ambient temp.:** -25℃~+60℃
- 安装**Mounting:** 免维护滚珠轴承Maintenance-free ball bearings

噪音等级 **Sound Pressure Level**	风量 **Air Flow**	风压 **Air Pressure**		速度控制 **Speed Control**	接线图 **Wiring Mode**
dB(A)	m³/h	Pa	with scroll housing		
70	970	670	FS3G180-2AGL-90	0-10VDC PWM RS-485	F2
76	1320	1265	FS3G180-2AGL-20		F3,F5

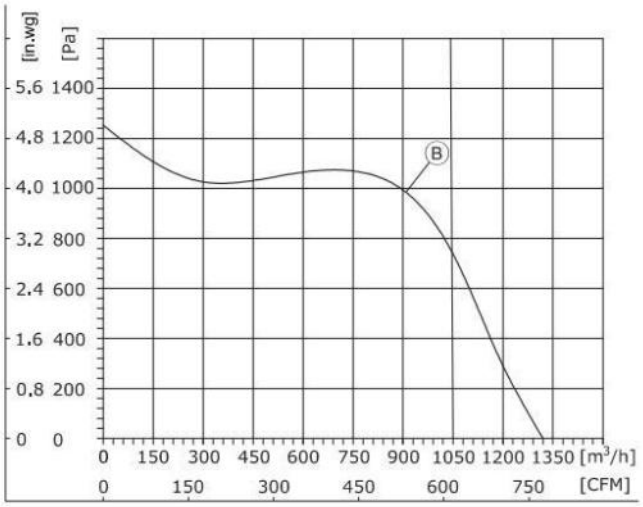

1、Air performance measured according to: ISO 5801, with DJ inlet ring without contact protection.
2、Intake-side sound level: LpA measured at 1 m distance from fan axis. The values given are only applicable under the specifi ed measuring conditions and may differ depending on the installation conditions.

(前向离心风机Forward Centrifugal Blower Without Scroll Housing) FF3G180-2AGL-90

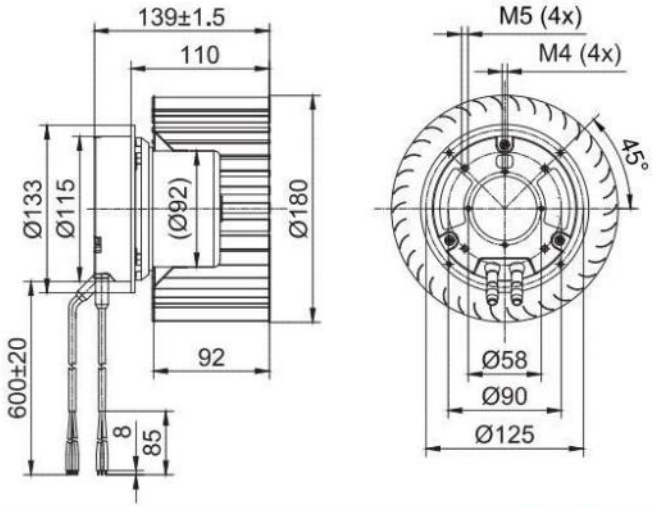

(前向离心风机Forward Centrifugal Blower Without Scroll Housing) FF3G180-2AGL-20

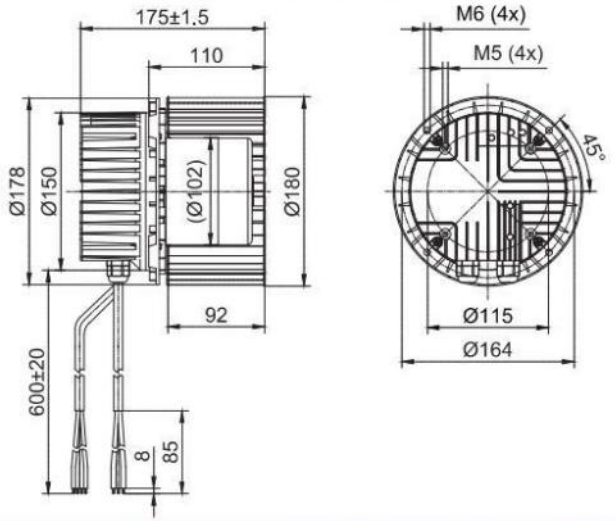

(单进风鼓风机Single Inlet Centrifugal Blower With Scroll Housing) FS3G180-2AGL-90

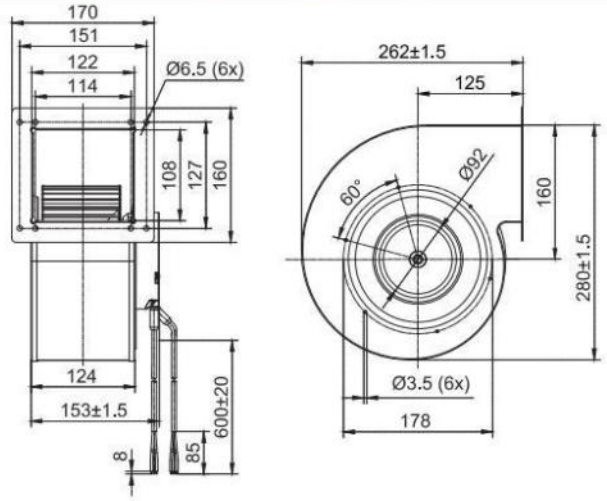

(单进风鼓风机Single Inlet Centrifugal Blower With Scroll Housing) FS3G180-2AGL-20

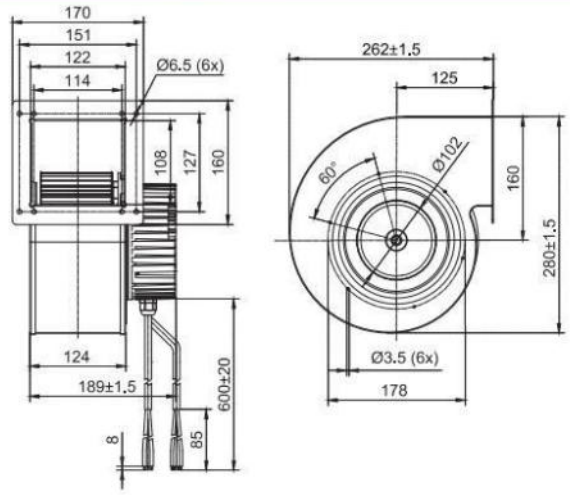

EC Single Inlet Centrifugal Blower D200



- 材料**Material:** 镀锌钢板
  风轮**Impeller:** Galvanized steel plate
  转子 Rotor: 电泳Electrophoresis
  端盖 Electronics housing: 压铸铝Die-cast aluminium
- 叶片数量**Number of blades:** 38
- 防护等级**Degree of protection:** IP 44/54
- 绝缘等级**Insulation class:** B
- 安装位置**Installation position:** 任意Any
- 模式**Mode:**连续工作制 Continuous operation (S1)

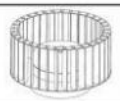	电机 **Motor**	曲线 **Curve**	额定电压 **Nominal Voltage**	额定电压范围 **Nominal Voltage Range**	频率 **Frequency**	电流 **Current**	转速 **Speed**	输入功率 **Max. input Power**
Type			VAC	VAC	Hz	A	RPM	W
FF3G200-2AGL-90	BLEC92	Ⓐ	230	184~270	50/60	1.5	1600	220
FF3G200-2AGL-20	BLEC102	Ⓑ	230	184~270	50/60	2.5	1900	500

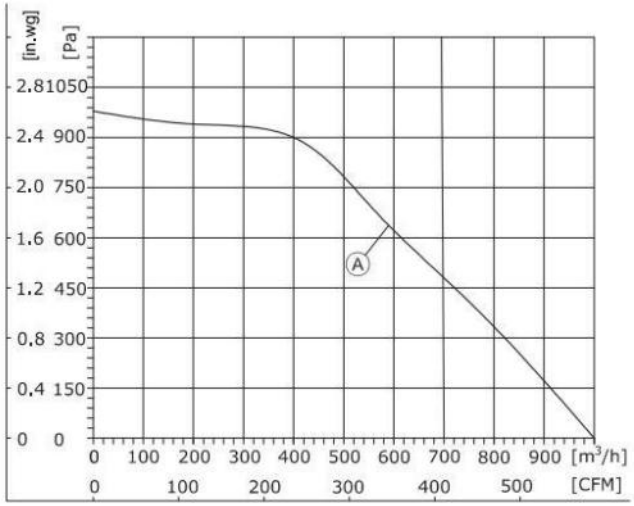

1、Air performance measured according to: ISO 5801, with DJ inlet ring without contact protection.
2、Intake-side sound level: LpA measured at 1 m distance from fan axis. The values given are only applicable under the specifi ed measuring conditions and may differ depending on the installation conditions.

EC Single Inlet Centrifugal Blower D200

- 旋转方向**Direction of rotation:** 正转，从转子方向Clockwise，viewed toward rotor
- 技术特性**Technical features:** 参见附图See connection diagram
- 泄漏电流**Touch curren:** < 3,5 mA
- 能效**Efficiency:** ErP2015
- 标准/证书**Valid For Approval/Standard**：CE,RoHS,ISO9001
  环境温度**Perm. ambient temp.**：-25℃~+60℃
- 安装**Mounting:** 免维护滚珠轴承Maintenance-free ball bearings

噪音等级 **Sound Pressure Level**	风量 **Air Flow**	风压 **Air Pressure**		速度控制 **Speed Control**	接线图 **Wiring Mode**
dB(A)	m³/h	Pa	with scroll housing		
74	1000	980	FS3G200-2AGL-90	0-10VDC PWM RS-485	F2
76	1650	700	FS3G200-2AGL-20		F3,F5

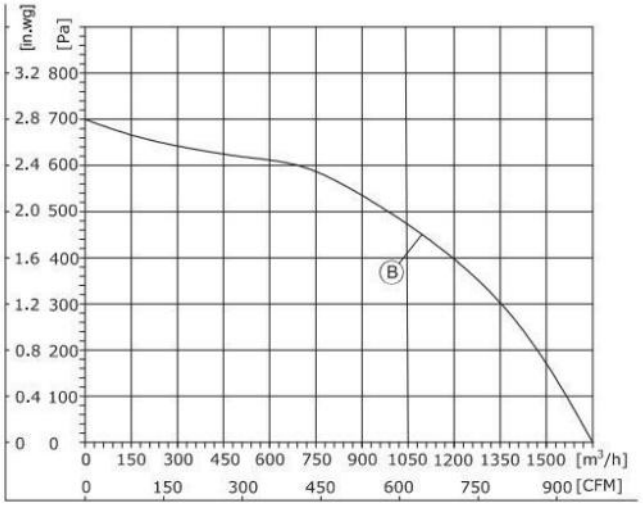

1、Air performance measured according to: ISO 5801, with DJ inlet ring without contact protection.
2、Intake-side sound level: LpA measured at 1 m distance from fan axis. The values given are only applicable under the specifi ed measuring conditions and may differ depending on the installation conditions.

(前向离心风机Forward Centrifugal Blower Without Scroll Housing)
FF3G225-2AGL-20

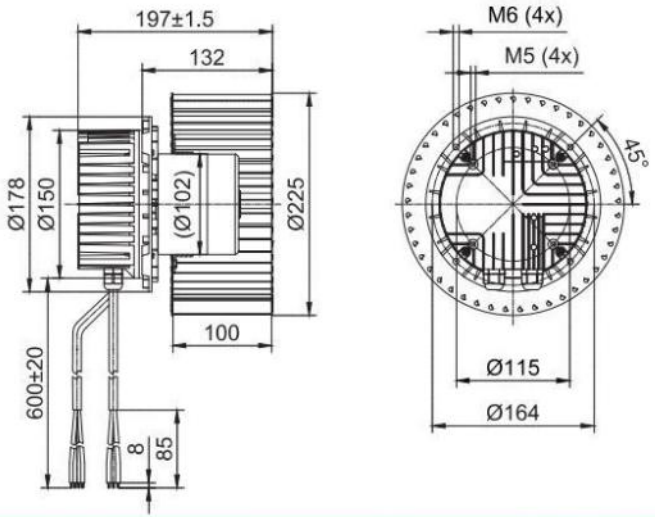

(单进风鼓风机Single Inlet Centrifugal Blower With Scroll Housing)
FS3G225-2AGL-20

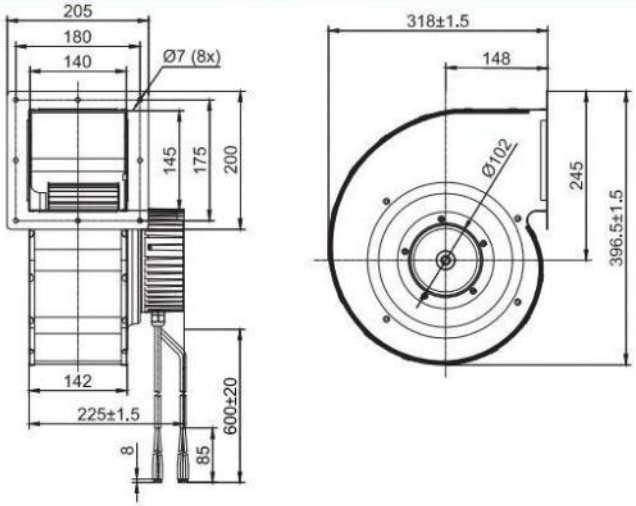

EC Double Inlet Centrifugal Blower D133



- 材料**Material:** 镀锌钢板
  风轮**Impeller:** Galvanized steel plate
  转子 Rotor: 电泳Electrophoresis
  端盖 Electronics housing: 压铸铝Die-cast aluminium
- 叶片数量**Number of blades:** 38
- 防护等级**Degree of protection:** IP 44
- 绝缘等级**Insulation class:** B
- 安装位置**Installation position:** 任意Any
- 模式**Mode:**连续工作制 Continuous operation (S1)

	电机 Motor	曲线 Curve	额定电压 Nominal Voltage	额定电压范围 Nominal Voltage Range	频率 Frequency	电流 Current	转速 Speed	输入功率 Max. input Power
Type			VAC	VAC	Hz	A	RPM	W
FD3G133-2AGL-70	BLEC72	Ⓐ	230	184~270	50/60	0.75	1500	105

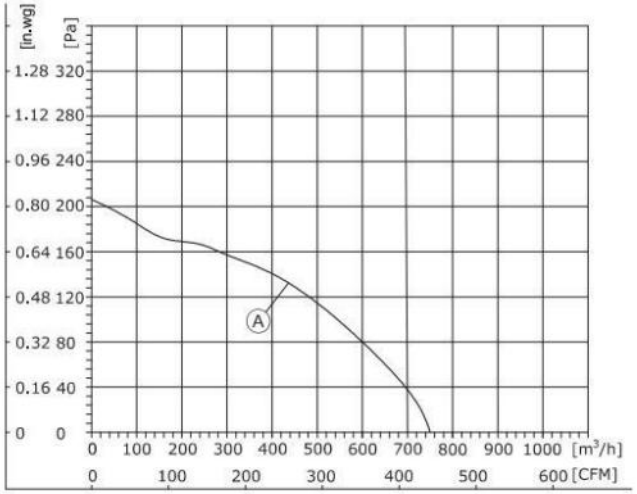

1、Air performance measured according to: ISO 5801, with DJ inlet ring without contact protection.
2、Intake-side sound level: LpA measured at 1 m distance from fan axis. The values given are only applicable under the specifi ed measuring conditions and may differ depending on the installation conditions.

EC Double Inlet Centrifugal Blower D133

- 旋转方向**Direction of rotation:** 正转，从转子方向Clockwise，viewed toward rotor
- 技术特性**Technical features:** 参见附图See connection diagram
- 泄漏电流**Touch curren:** < 3,5 mA
- 能效**Efficiency:** ErP2015
- 标准/证书**Valid For Approval/Standard:** CE,RoHS,ISO9001
  环境温度**Perm. ambient temp.:** -25℃~+60℃
- 安装**Mounting:** 免维护滚珠轴承Maintenance-free ball bearings

EC Blowers

噪音等级 Sound Pressure Level	风量 Air Flow	风压 Air Pressure	速度控制 Speed Control	接线图 Wiring Mode
dB(A)	m³/h	Pa		
64	752	205	0-10VDC PWM	F1

(双进风鼓风机Dual Inlet Centrifugal Blower With Scroll Housing) FD3G133-2AGL-70

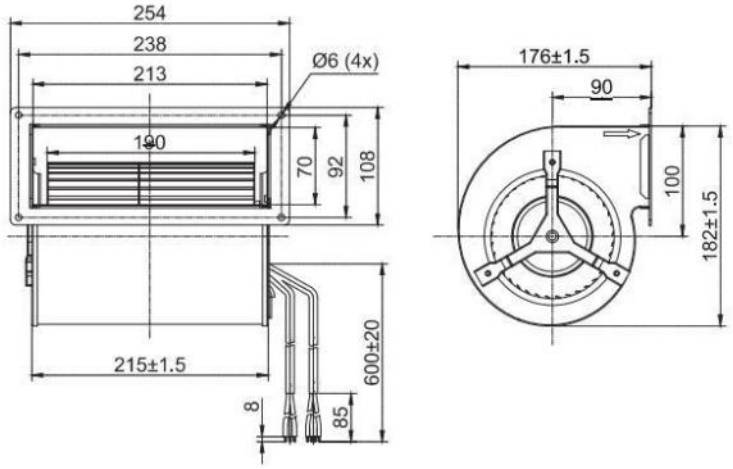

EC Double Inlet Centrifugal Blower D146



- 材料**Material:** 塑料/镀锌钢板
  风轮**Impeller:** Plastic/Galvanized steel plate
  转子 Rotor: 电泳Electrophoresis
  端盖 Electronics housing: 压铸铝Die-cast aluminium
- 叶片数量**Number of blades:** 36/38
- 防护等级**Degree of protection:** IP 44
- 绝缘等级**Insulation class:** B
- 安装位置**Installation position:** 任意Any
- 模式**Mode:**连续工作制 Continuous operation (S1)

	电机 Motor	曲线 Curve	额定电压 Nominal Voltage	额定电压范围 Nominal Voltage Range	频率 Frequency	电流 Current	转速 Speed	输入功率 Max. input Power
Type			VAC	VAC	Hz	A	RPM	W
FD3G146-2AGL-90	BLEC92	Ⓐ	230	184~270	50/60	1.4	1700	190
FD3G146-2AGP-90	BLEC92	Ⓑ	230	184~270	50/60	2.2	1850	260
FD3G146-2APV-90	BLEC92	Ⓒ	230	184~270	50/60	0.9	1650	150

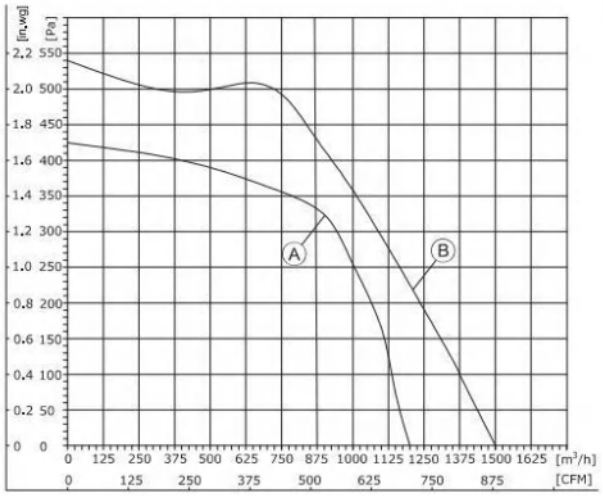

1、Air performance measured according to: ISO 5801, with DJ inlet ring without contact protection.
2、Intake-side sound level: LpA measured at 1 m distance from fan axis. The values given are only applicable under the specifi ed measuring conditions and may differ depending on the installation conditions.

EC Double Inlet Centrifugal Blower D146

- 旋转方向**Direction of rotation:** 正转，从转子方向Clockwise，viewed toward rotor
- 技术特性**Technical features:** 参见附图See connection diagram
- 泄漏电流**Touch curren:** < 3,5 mA
- 能效**Efficiency:** ErP2015
- 标准/证书**Valid For Approval/Standard**：CE,RoHS,ISO9001
  环境温度**Perm. ambient temp.**：.-25℃~+60℃
- 安装**Mounting:** 免维护滚珠轴承Maintenance-free ball bearings

噪音等级 Sound Pressure Level	风量 Air Flow	风压 Air Pressure	速度控制 Speed Control	接线图 Wiring Mode
dB(A)	m³/h	Pa	0-10VDC PWM RS-485	
72.1	1200	425		F2
74	1499	540		F2
69.6	1157	629		F2

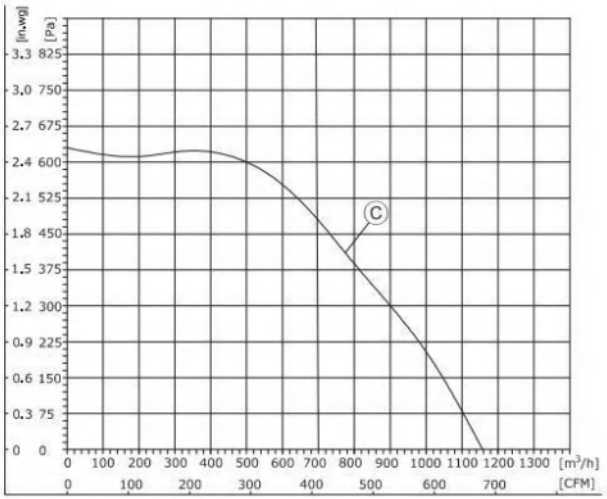

1、Air performance measured according to: ISO 5801, with DJ inlet ring without contact protection.
2、Intake-side sound level: LpA measured at 1 m distance from fan axis. The values given are only applicable under the specifi ed measuring conditions and may differ depending on the installation conditions.

(双进风鼓风机风机Dual Inlet Centrifugal Blower With Scroll Housing)
FD3G146-2AGL-90

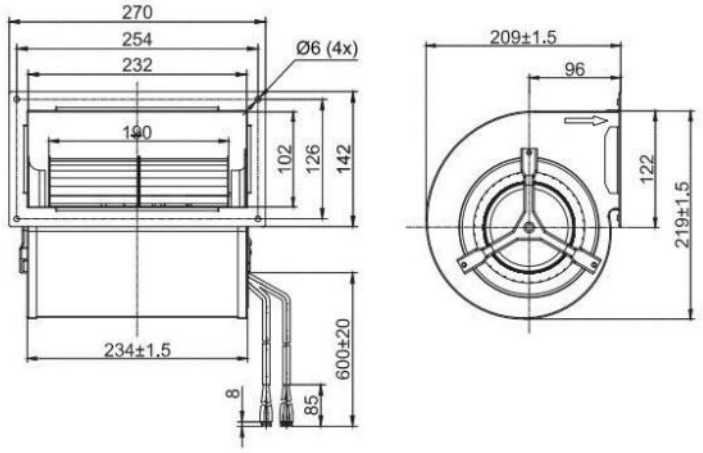

(双进风鼓风机风机Dual Inlet Centrifugal Blower With Scroll Housing)
FD3G146-2AGP-90

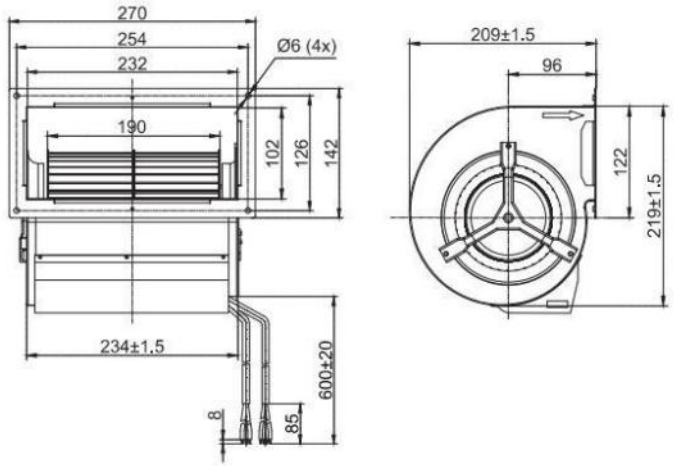

(双进风鼓风机风机Dual Inlet Centrifugal Blower With Scroll Housing)
FD3G146-2APV-90

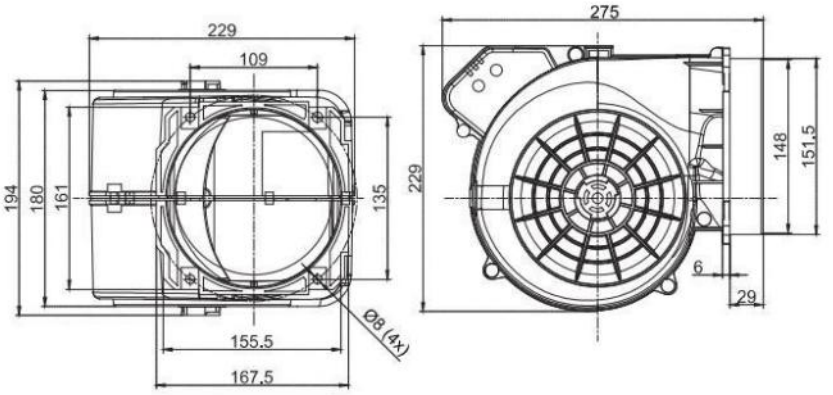



EC Double Inlet Centrifugal Blower D180

- 材料**Material:** 镀锌钢板
  风轮**Impeller:** Galvanized steel plate
  转子 Rotor: 电泳Electrophoresis
  端盖 Electronics housing: 压铸铝Die-cast aluminium
- 叶片数量**Number of blades:** 38
- 防护等级**Degree of protection:** IP 54
- 绝缘等级**Insulation class:** B
- 安装位置**Installation position:** 任意Any
- 模式**Mode:**连续工作制 Continuous operation (S1)

	电机 Motor	曲线 Curve	额定电压 Nominal Voltage	额定电压范围 Nominal Voltage Range	频率 Frequency	电流 Current	转速 Speed	输入功率 Max. input Power
Type			VAC	VAC	Hz	A	RPM	W
FD3G180-2AGL-20	BLEC102	Ⓐ	230	184~270	50/60	1.9	1550	400

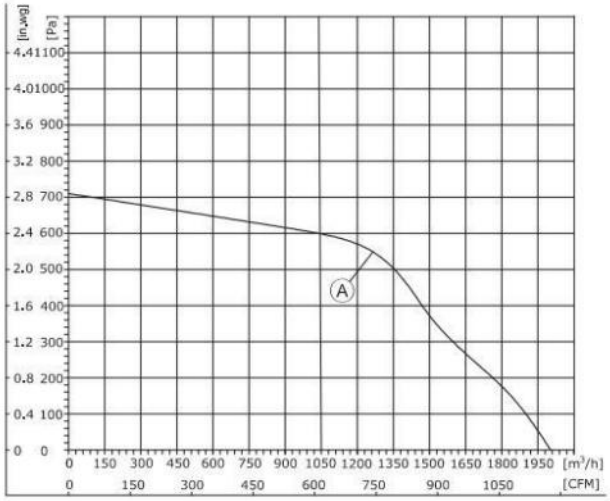

1、Air performance measured according to: ISO 5801, with DJ inlet ring without contact protection.
2、Intake-side sound level: LpA measured at 1 m distance from fan axis. The values given are only applicable under the specifi ed measuring conditions and may differ depending on the installation conditions.

EC Double Inlet Centrifugal BlowerD180

- 旋转方向**Direction of rotation:** 正转，从转子方向Clockwise，viewed toward rotor
- 技术特性**Technical features:** 参见附图See connection diagram
- 泄漏电流**Touch curren:** < 3,5 mA
- 能效**Efficiency:** ErP2015
- 标准/证书**Valid For Approval/Standard:** CE,RoHS,ISO9001
  环境温度**Perm. ambient temp.:** -25℃~+60℃
- 安装**Mounting:** 免维护滚珠轴承Maintenance-free ball bearings

EC Blowers

噪音等级 Sound Pressure Level	风量 Air Flow	风压 Air Pressure	速度控制 Speed Control	接线图 Wiring Mode
dB(A)	m³/h	Pa		
74	2000	710	0-10VDC PWM RS-485	F3,F5

(双进风鼓风机Dual Inlet Centrifugal Blower With Scroll Housing)
FD3G180-2AGL-20

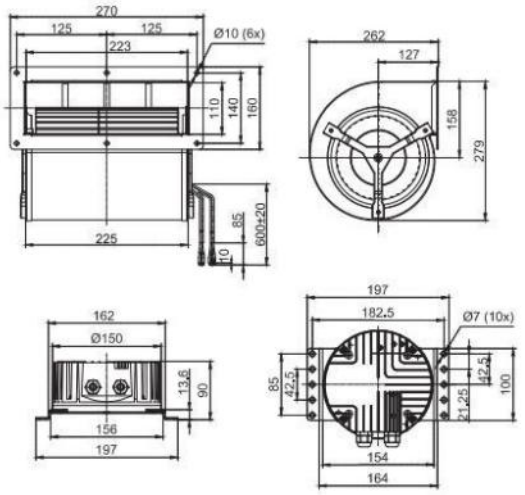

(前向离心风机Forward Centrifugal Blower Without Scroll Housing) FF3G200-2AGL-90

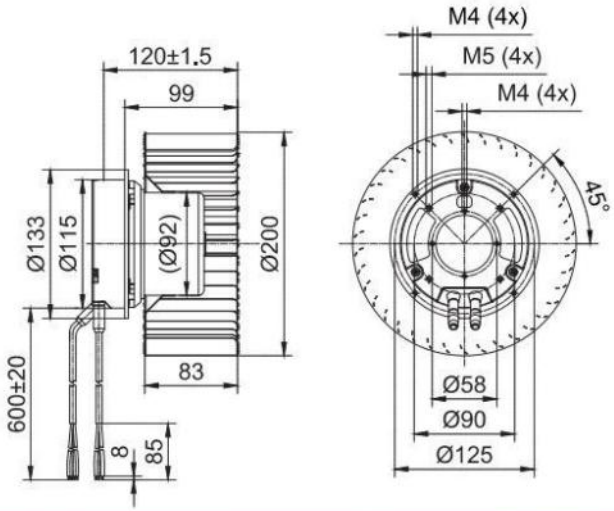

(前向离心风机Forward Centrifugal Blower Without Scroll Housing) FF3G200-2AGL-20

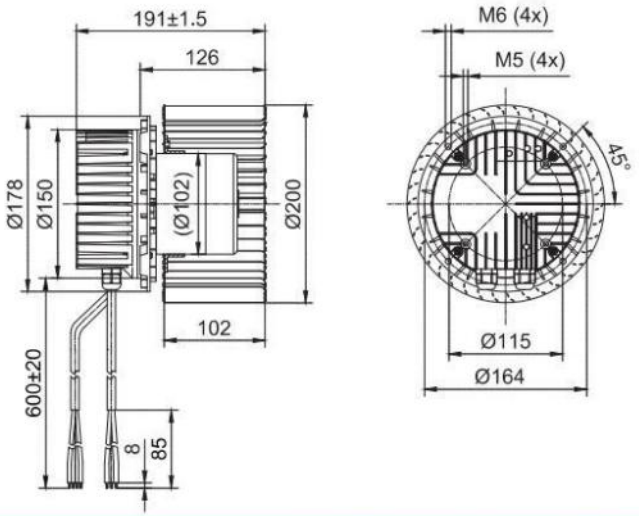

(单进风鼓风机Single Inlet Centrifugal Blower With Scroll Housing) FS3G200-2AGL-90

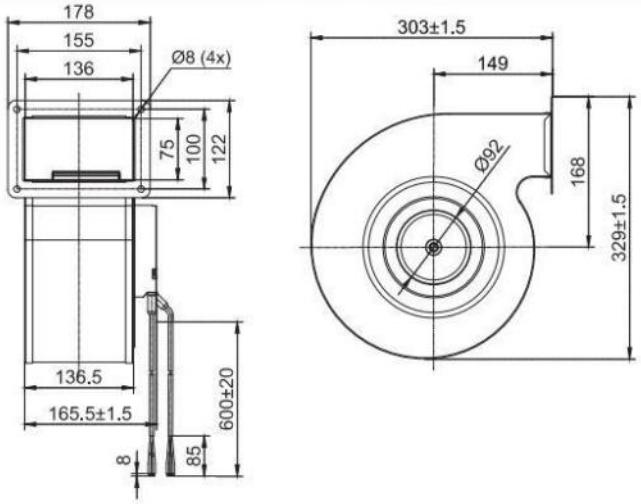

(单进风鼓风机Single Inlet Centrifugal Blower With Scroll Housing) FS3G200-2AGL-20

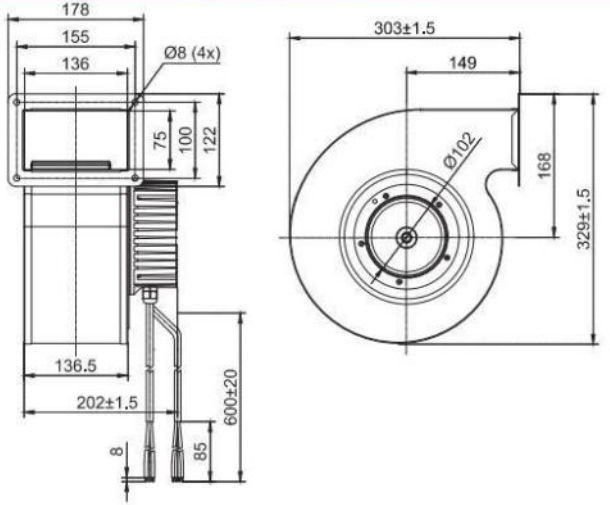



EC Single Inlet Centrifugal Blower D225

- 材料**Material:** 镀锌钢板
  风轮**Impeller:** Galvanized steel plate
  转子 Rotor: 电泳Electrophoresis
  端盖 Electronics housing: 压铸铝Die-cast aluminium
- 叶片数量**Number of blades:** 38
- 防护等级**Degree of protection:** IP 54
- 绝缘等级**Insulation class:** B
- 安装位置**Installation position:** 任意Any
- 模式**Mode:**连续工作制 Continuous operation (S1)

	电机 **Motor**	曲线 **Curve**	额定电压 **Nominal Voltage**	额定电压范围 **Nominal Voltage Range**	频率 **Frequency**	电流 **Current**	转速 **Speed**	输入功率 **Max. input Power**
Type			VAC	VAC	Hz	A	RPM	W
FF3G225-2AGL-20	BLEC102	Ⓐ	230	184~270	50/60	1.5	1250	355

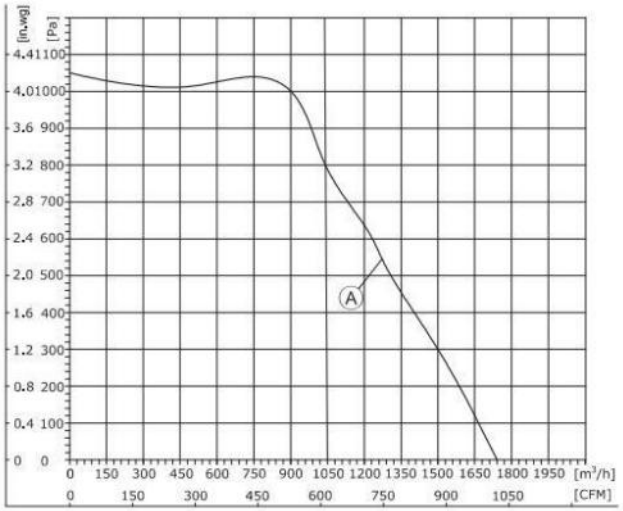

1、Air performance measured according to: ISO 5801, with DJ inlet ring without contact protection.
2、Intake-side sound level: LpA measured at 1 m distance from fan axis. The values given are only applicable under the specifi ed measuring conditions and may differ depending on the installation conditions.

EC Single Inlet Centrifugal Blower D225

- 旋转方向**Direction of rotation:** 正转，从转子方向Clockwise，viewed toward rotor
- 技术特性**Technical features:** 参见附图See connection diagram
- 泄漏电流**Touch curren:** < 3,5 mA
- 能效**Efficiency:** ErP2015
- 标准/证书**Valid For Approval/Standard:** CE,RoHS,ISO9001
  环境温度**Perm. ambient temp.:** -25℃~+60℃
- 安装**Mounting:** 免维护滚珠轴承Maintenance-free ball bearings

噪音等级 **Sound Pressure Level**	风量 **Air Flow**	风压 **Air Pressure**	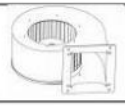	速度控制 **Speed Control**	接线图 **Wiring Mode**
dB(A)	m³/h	Pa	with scroll housing		
74.9	1741	1053	FS3G225-2AGL-20	0-10VDC PWM RS-485	F3,F5



EC-DC Series

DC Centrifugal Fans



DC Backward Centrifugal Fans D133

- 材料**Material:** 塑料风轮Impeller: Plastic
  转子 Rotor: 电泳Electrophoresis
  端盖 Electronics housing: 压铸铝Die-cast aluminium
- 叶片数量**Number of blades:** 7
- 防护等级**Degree of protection:** IP 44
- 绝缘等级**Insulation class:** B
- 安装位置**Installation position:** 任意Any
- 模式**Mode:**连续工作制 Continuous operation (S1)

	电机 Motor	曲线 Curve	额定电压 Nominal Voltage	额定电压范围 Nominal Voltage Range	电流 Current	转速 Speed	输入功率 Max. input Power
Type			VDC	VDC	A	RPM	W
FB3G133-24PL-70	BLDC72	Ⓐ	24	16~28	1.2	3800	28
FB3G133-48PL-70	BLDC72	Ⓐ	48	36~57	0.6	3800	28
FB3G133-24PL-71	BLDC72	Ⓑ	24	16~28	1.75	4460	42
FB3G133-48PL-71	BLDC72	Ⓑ	48	36~57	0.875	4460	42

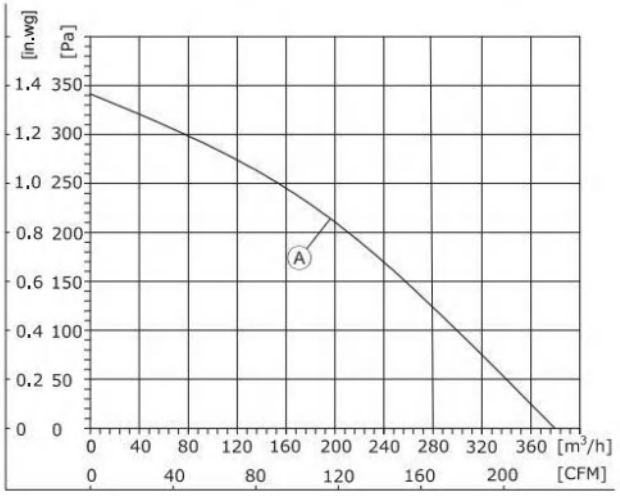

1、Air performance measured according to: ISO 5801, with DJ inlet ring without contact protection.
2、Intake-side sound level: LpA measured at 1 m distance from fan axis. The values given are only applicable under the specifi ed measuring conditions and may differ depending on the installation conditions.

DC Backward Centrifugal Fans D133

- 旋转方向**Direction of rotation:** 正转，从转子方向Clockwise，viewed toward rotor
- 技术特性**Technical features:** 参见附图See connection diagram
- 泄漏电流**Touch curren:** < 3,5 mA
- 能效**Efficiency:** ErP2015
- 标准/证书**Valid For Approval/Standard**：CE,RoHS,ISO9001
  环境温度**Perm. ambient temp.**：.-25℃~+60℃
- 安装**Mounting:** 免维护滚珠轴承Maintenance-free ball bearings

噪音等级 Sound Pressure Level	风量 Air Flow	风压 Air Pressure	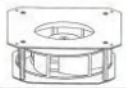	速度控制 Speed Control	接线图 Wiring Mode
dB(A)	m³/h	Pa	with support bracket		
63	380	343	FK3G133-24PL-70	0-10VDC PWM	S1
63	380	343	FK3G133-48PL-70		S1
73	425	490	FK3G133-24PL-71		S1
73	425	490	FK3G133-48PL-71		S1

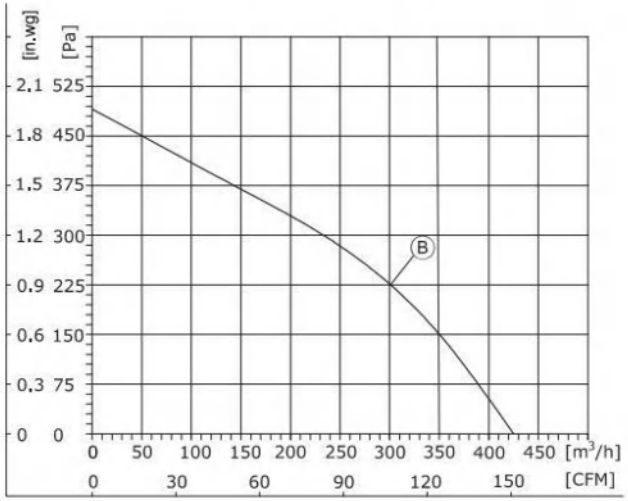

1、Air performance measured according to: ISO 5801, with DJ inlet ring without contact protection.
2、Intake-side sound level: LpA measured at 1 m distance from fan axis. The values given are only applicable under the specifi ed measuring conditions and may differ depending on the installation conditions.

(后向离心风机Centrifugal Fan)
FB3G133-24PL-70/FB3G133-48PL-70

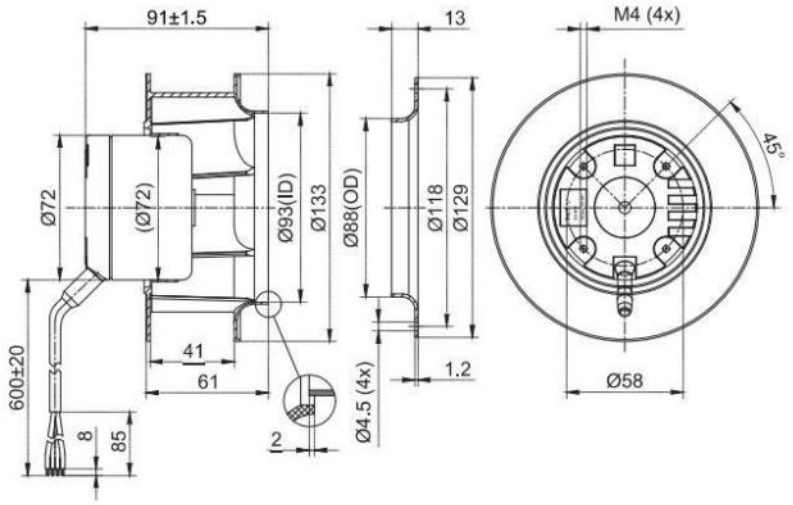

(后向离心风机Centrifugal Fan)
FB3G133-24PL-71/FB3G133-48PL-71

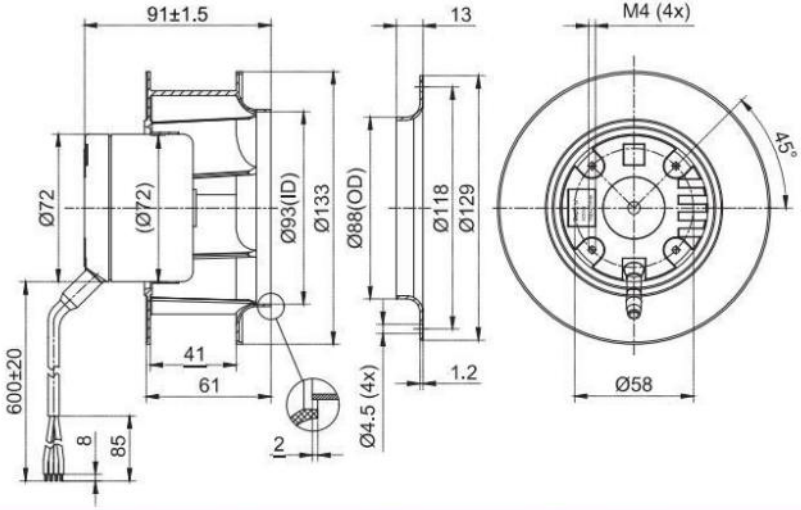

(支架离心风机Centrifugal Fan With Support Bracket)
FK3G133-24PL-70/FK3G133-48PL-70

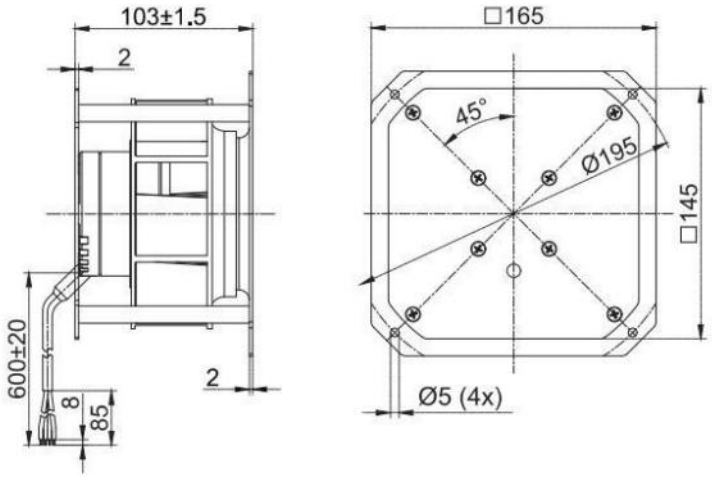

(支架离心风机Centrifugal Fan With Support Bracket)
FK3G133-24PL-71/FK3G133-48PL-71

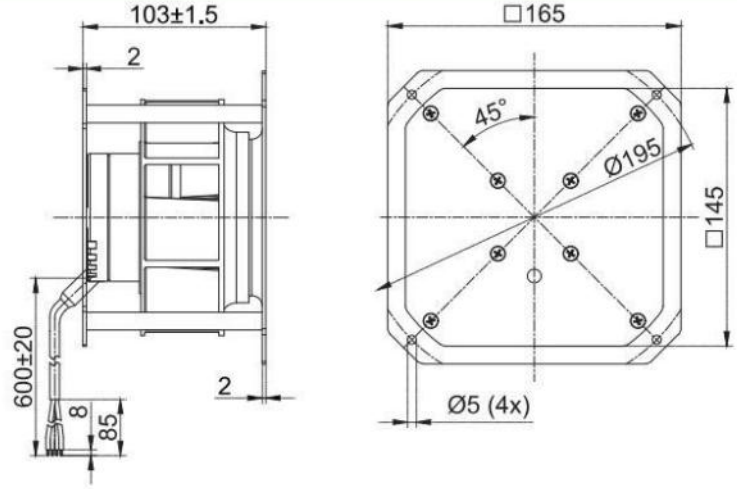

DC Centrifugal Fans



DC Backward Centrifugal Fans D175

- 材料**Material:** 塑料风轮Impeller: Plastic
  转子 Rotor: 电泳Electrophoresis
  端盖 Electronics housing: 压铸铝Die-cast aluminium
- 叶片数量**Number of blades:** 7
- 防护等级**Degree of protection:** IP 44
- 绝缘等级**Insulation class:** B
- 安装位置**Installation position:** 任意Any
- 模式**Mode:**连续工作制 Continuous operation (S1)

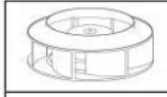	电机 Motor	曲线 Curve	额定电压 Nominal Voltage	额定电压范围 Nominal Voltage Range	电流 Current	转速 Speed	输入功率 Max. input Power
Type			VDC	VDC	A	RPM	W
FB3G175-24PY-70	BLDC72	Ⓐ	24	16~28	1.9	3300	44
FB3G175-48PY-70	BLDC72	Ⓐ	48	36~57	0.95	3300	44
FB3G175-24PY-71	BLDC72	Ⓑ	24	16~28	3.6	4250	86
FB3G175-48PY-71	BLDC72	Ⓑ	48	36~57	1.8	4250	86

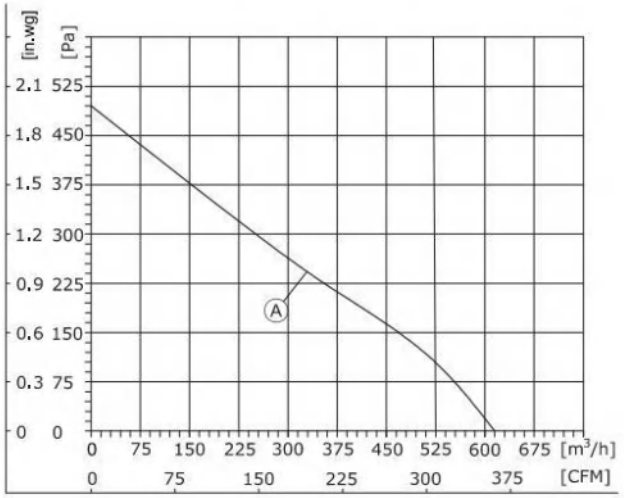

1、Air performance measured according to: ISO 5801, with DJ inlet ring without contact protection.
2、Intake-side sound level: LpA measured at 1 m distance from fan axis. The values given are only applicable under the specifi ed measuring conditions and may differ depending on the installation conditions.

DC Backward Centrifugal Fans D175

- 旋转方向**Direction of rotation:** 正转，从转子方向Clockwise，viewed toward rotor
- 技术特性**Technical features:** 参见附图See connection diagram
- 泄漏电流**Touch curren:** < 3,5 mA
- 能效**Efficiency:** ErP2015
- 标准/证书**Valid For Approval/Standard**：CE,RoHS,ISO9001
  环境温度**Perm. ambient temp.**：.-25℃~+60℃
- 安装**Mounting:** 免维护滚珠轴承Maintenance-free ball bearings

噪音等级 Sound Pressure Level	风量 Air Flow	风压 Air Pressure	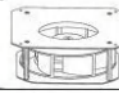	速度控制 Speed Control	接线图 Wiring Mode
dB(A)	m³/h	Pa	with support bracket		
68	615	492	FK3G175-24PY-70	0-10VDC PWM	S1
68	615	492	FK3G175-48PY-70		S1
73	715	610	FK3G175-24PY-71		S1
73	715	610	FK3G175-48PY-71		S1

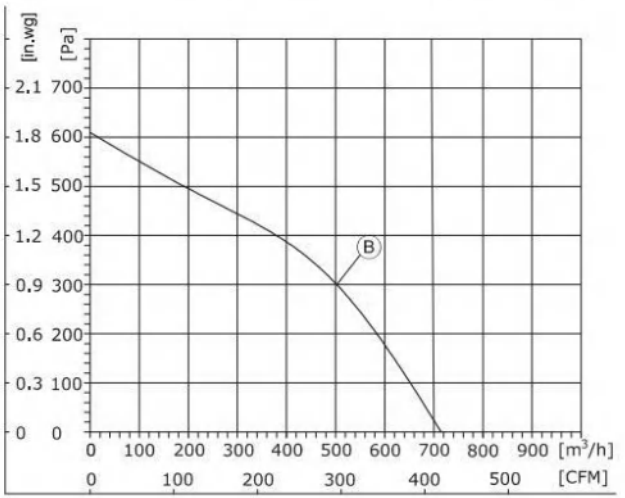

1、Air performance measured according to: ISO 5801, with DJ inlet ring without contact protection.
2、Intake-side sound level: LpA measured at 1 m distance from fan axis. The values given are only applicable under the specifi ed measuring conditions and may differ depending on the installation conditions.

(后向离心风机Centrifugal Fan)
FB3G175-24PY-70/FB3G175-48PY-70

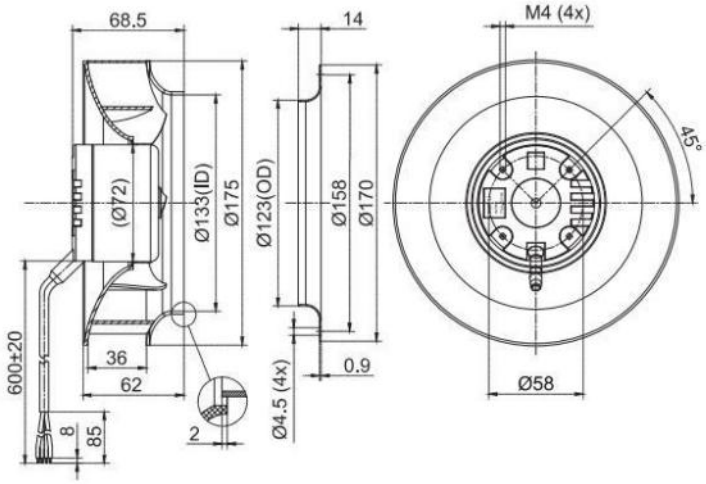

(后向离心风机Centrifugal Fan)
FB3G175-24PY-71/FB3G175-48PY-71

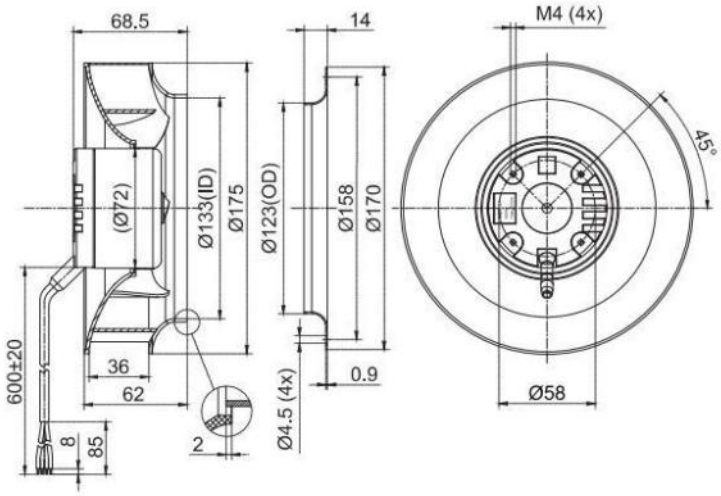

(支架离心风机Centrifugal Fan With Support Bracket)
FK3G175-24PY-70/FK3G175-48PY-70

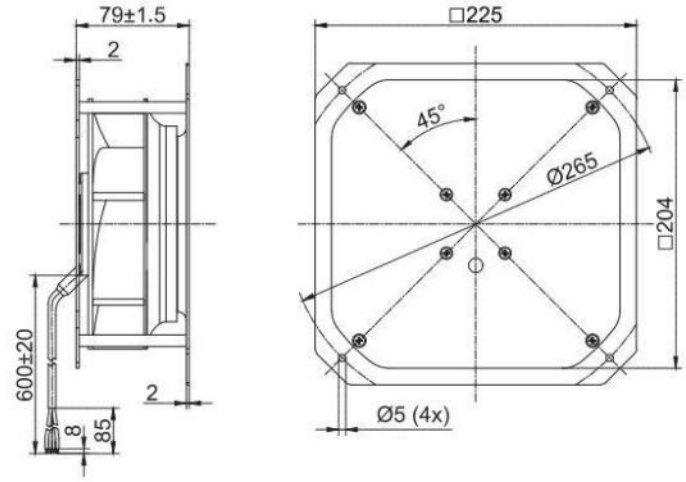

(支架离心风机Centrifugal Fan With Support Bracket)
FK3G175-24PY-71/FK3G175-48PY-71

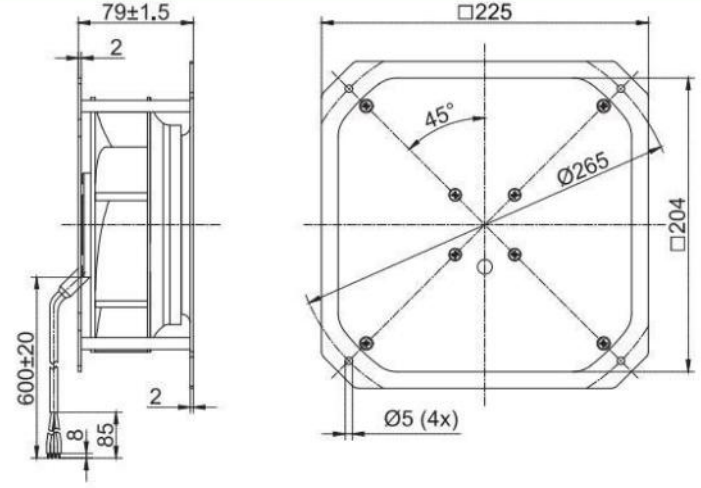



DC Backward Centrifugal Fans D190

- 材料**Material:** 塑料风轮Impeller: Plastic
  转子 Rotor: 电泳Electrophoresis
  端盖 Electronics housing: 压铸铝Die-cast aluminium
- 叶片数量**Number of blades:** 7
- 防护等级**Degree of protection:** IP 44
- 绝缘等级**Insulation class:** B
- 安装位置**Installation position:** 任意Any
- 模式**Mode:**连续工作制 Continuous operation (S1)

DC Backward Centrifugal Fans D190

- 旋转方向**Direction of rotation:** 正转，从转子方向Clockwise，viewed toward rotor
- 技术特性**Technical features:** 参见附图See connection diagram
- 泄漏电流**Touch curren:** < 3,5 mA
- 能效**Efficiency:** ErP2015
- 标准/证书**Valid For Approval/Standard**：CE,RoHS,ISO9001
  环境温度**Perm. ambient temp.**：.-25℃~+60℃
- 安装**Mounting:** 免维护滚珠轴承Maintenance-free ball bearings

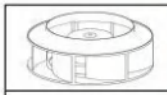	电机 Motor	曲线 Curve	额定电压 Nominal Voltage	额定电压范围 Nominal Voltage Range	电流 Current	转速 Speed	输入功率 Max. input Power
Type			VDC	VDC	A	RPM	W
FB3G190-24PY-70	BLDC72	Ⓐ	24	16~28	2.4	2950	57
FB3G190-48PY-70	BLDC72	Ⓐ	48	36~57	1.2	2950	57
FB3G190-24PY-71	BLDC72	Ⓑ	24	16~28	3.0	3300	72
FB3G190-48PY-71	BLDC72	Ⓑ	48	36~57	1.5	3300	72
FB3G190-48PY-90	BLDC92	Ⓒ	48	36~57	3.0	4000	144
FB3G190-85PS-90	BLDC92	Ⓓ	85	68~102	2.1	4300	175
FB3G190-110PS-90	BLDC92	Ⓓ	110	88~132	1.6	4300	175

噪音等级 Sound Pressure Level	风量 Air Flow	风压 Air Pressure	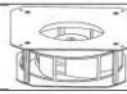	速度控制 Speed Control	接线图 Wiring Mode
dB(A)	m³/h	Pa	with support bracket		
68	621	403	FK3G190-24PY-70	0-10VDC PWM Modbus485	S1
68	621	403	FK3G190-48PY-70		S1
70	665	480	FK3G190-24PY-71		S1
70	665	480	FK3G190-48PY-71		S1
72	780	798	FK3G190-48PY-90		S2
73	903	782	FK3G190-85PS-90		S2
73	903	782	FK3G190-110PS-90		S2

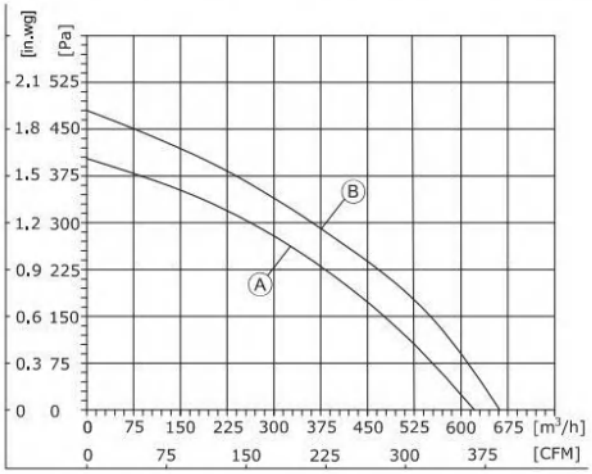

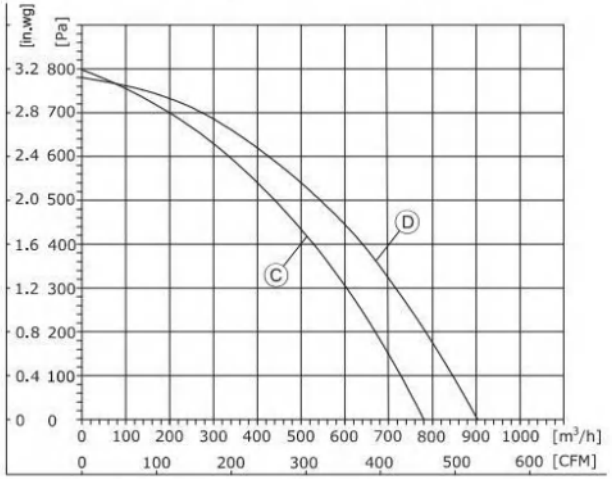

1、Air performance measured according to: ISO 5801, with DJ inlet ring without contact protection.
2、Intake-side sound level: LpA measured at 1 m distance from fan axis. The values given are only applicable under the specifi ed measuring conditions and may differ depending on the installation conditions.

1、Air performance measured according to: ISO 5801, with DJ inlet ring without contact protection.
2、Intake-side sound level: LpA measured at 1 m distance from fan axis. The values given are only applicable under the specifi ed measuring conditions and may differ depending on the installation conditions.

DC Centrifugal Fan

(后向离心风机Centrifugal Fan)
FB3G190-24PY-70/FB3G190-48PY-70

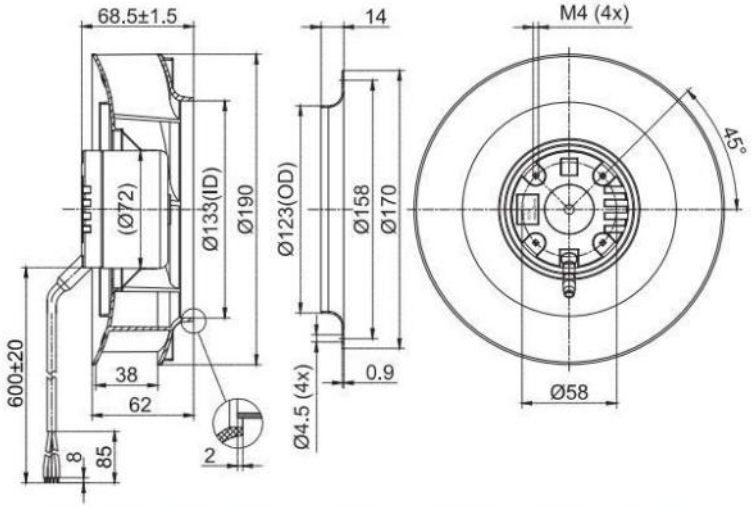

(后向离心风机Centrifugal Fan)
FB3G190-24PY-71/FB3G190-48PY-71

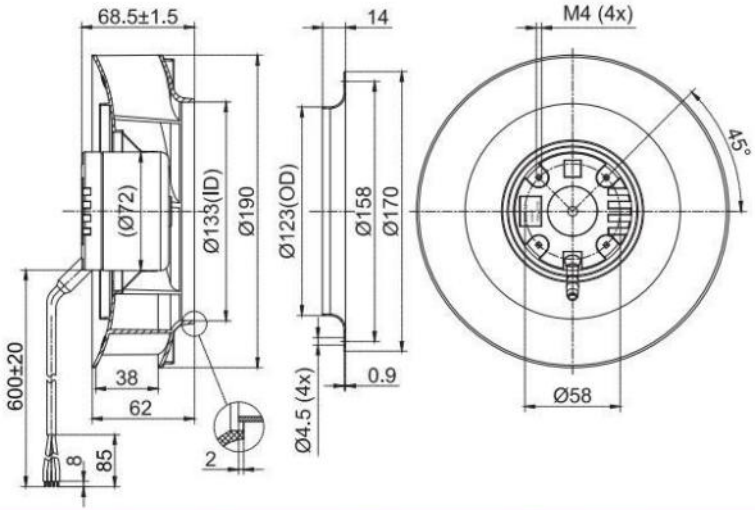

(支架离心风机Centrifugal Fan With Support Bracket)
FK3G190-24PY-70/FK3G190-48PY-70

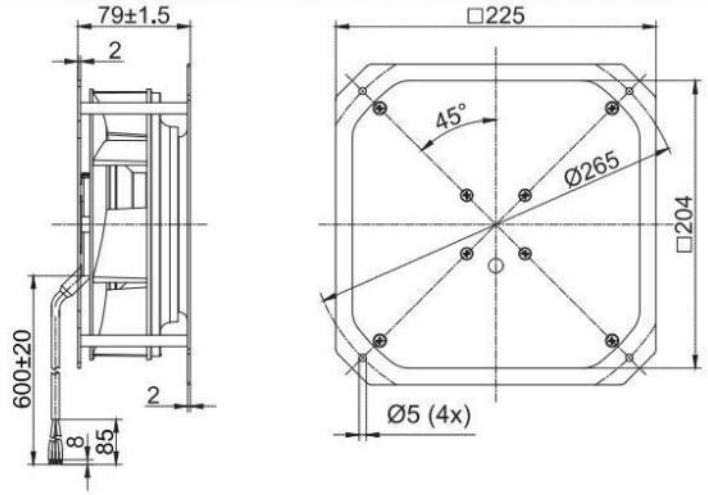

(支架离心风机Centrifugal Fan With Support Bracket)
FK3G190-24PY-71/FK3G190-48PY-71

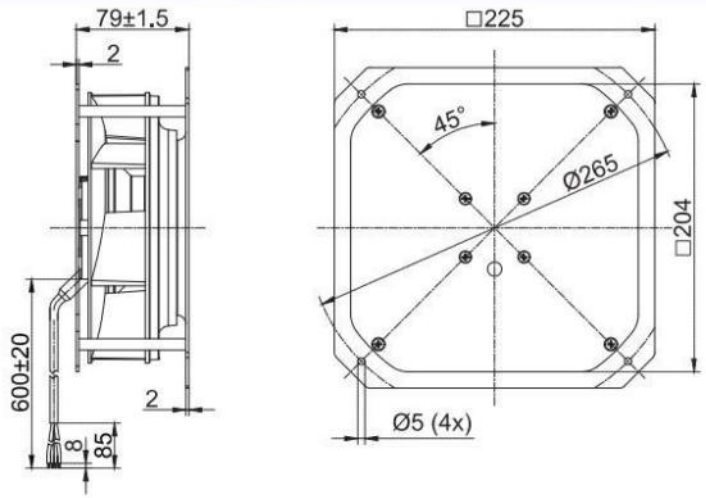

(后向离心风机Centrifugal Fan)
FB3G190-48PY-90

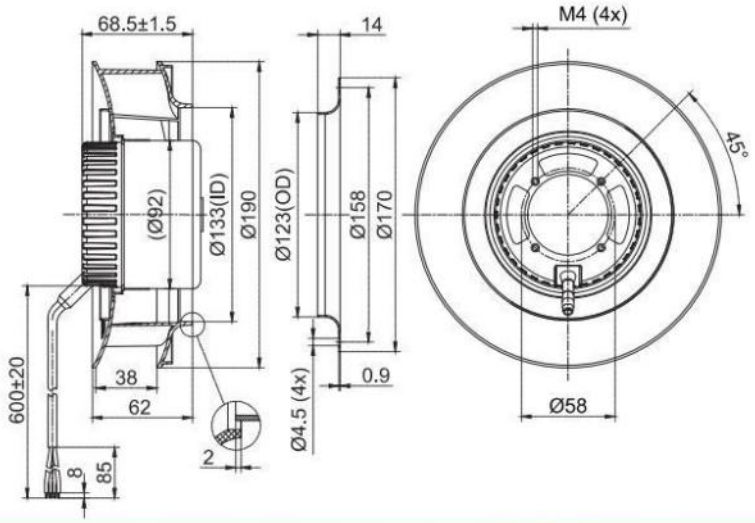

(后向离心风机Centrifugal Fan)
FB3G190-85PS-90

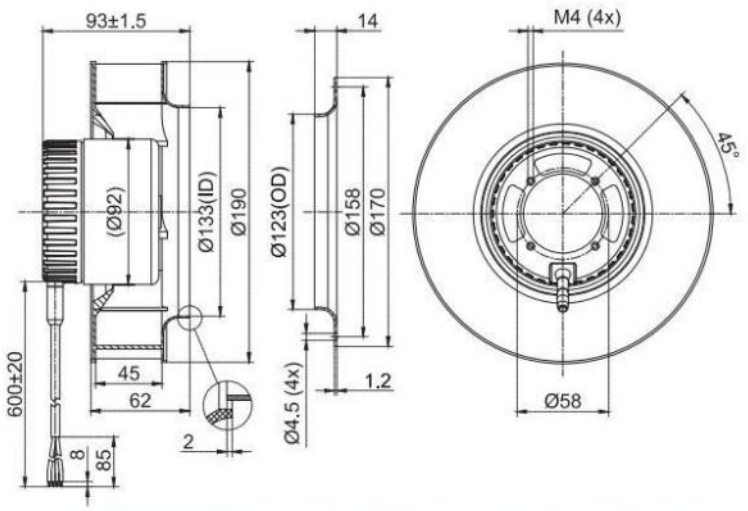

(支架离心风机Centrifugal Fan With Support Bracket)
FK3G190-48PY-90

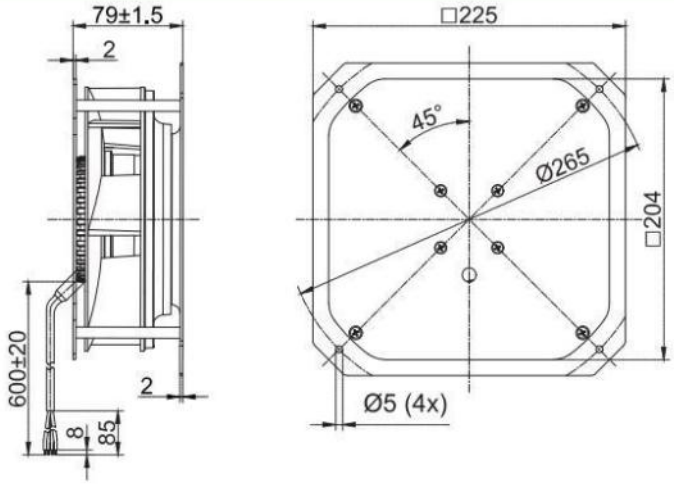

(支架离心风机Centrifugal Fan With Support Bracket)
FK3G190-85PS-90

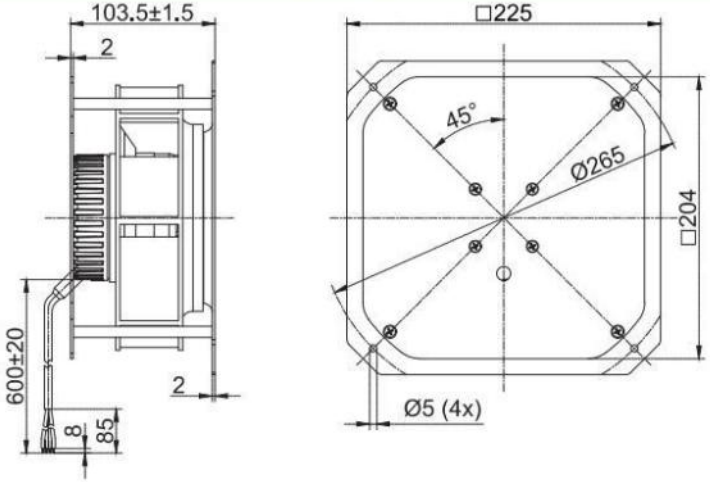

DC Centrifugal Fan

(后向离心风机Centrifugal Fan)
FB3G190-110PS-90

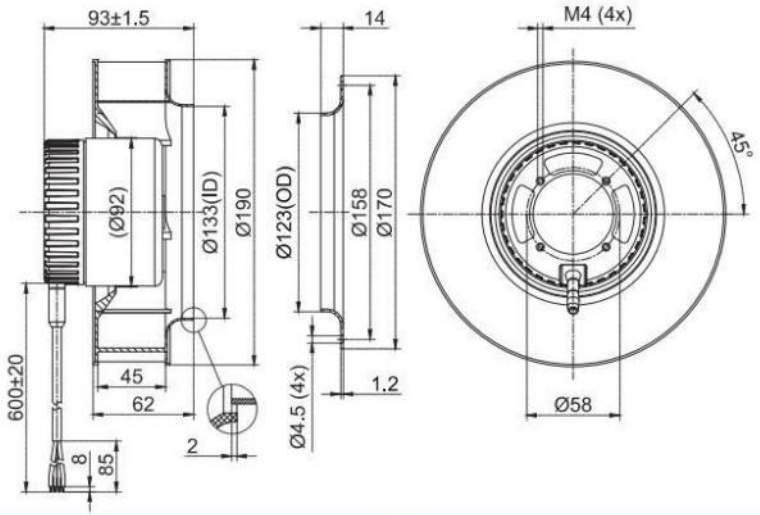

(支架离心风机Centrifugal Fan With Support Bracket)
FK3G190-110PS-90

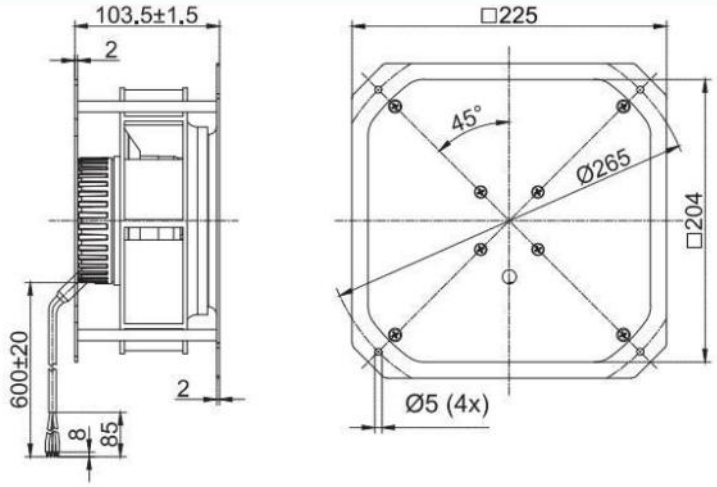

DC Centrifugal Fans



DC Backward Centrifugal Fans D220

- 材料**Material:** 塑料风轮Impeller: Plastic
  转子 Rotor: 电泳Electrophoresis
  端盖 Electronics housing: 压铸铝Die-cast aluminium
- 叶片数量**Number of blades:** 7
- 防护等级**Degree of protection:** IP 44
- 绝缘等级**Insulation class:** B
- 安装位置**Installation position:** 任意Any
- 模式**Mode:**连续工作制 Continuous operation (S1)

	电机 Motor	曲线 Curve	额定电压 Nominal Voltage	额定电压范围 Nominal Voltage Range	电流 Current	转速 Speed	输入功率 Max. input Power
Type			VDC	VDC	A	RPM	W
FB3G220-24PY-90	BLDC92	Ⓐ	24	16~28	4.8	3150	116
FB3G220-48PY-90	BLDC92	Ⓐ	48	36~57	2.4	3150	116
FB3G220-85PY-90	BLDC92	Ⓑ	85	68~102	2.1	3550	175
FB3G220-110PY-90	BLDC92	Ⓑ	110	88~132	1.6	3550	175

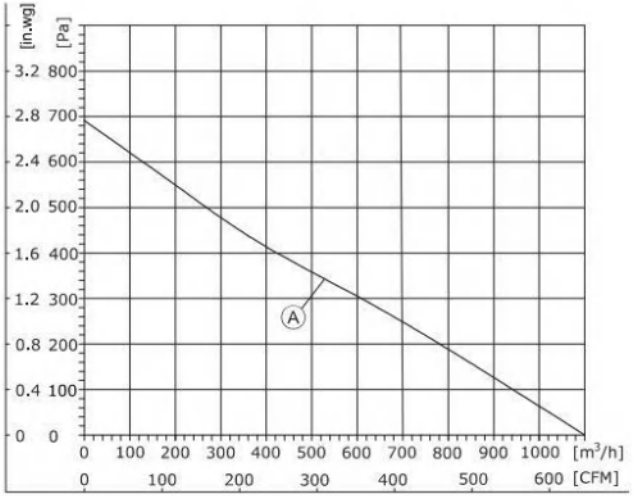

1、Air performance measured according to: ISO 5801, with DJ inlet ring without contact protection.
2、Intake-side sound level: LpA measured at 1 m distance from fan axis. The values given are only applicable under the specifi ed measuring conditions and may differ depending on the installation conditions.

DC Backward Centrifugal Fans D220

- 旋转方向**Direction of rotation:** 正转，从转子方向Clockwise，viewed toward rotor
- 技术特性**Technical features:** 参见附图See connection diagram
- 泄漏电流**Touch curren:** < 3,5 mA
- 能效**Efficiency:** ErP2015
- 标准/证书**Valid For Approval/Standard**：CE,RoHS,ISO9001
  环境温度**Perm. ambient temp.**：.-25℃~+60℃
- 安装**Mounting:** 免维护滚珠轴承Maintenance-free ball bearings

噪音等级 Sound Pressure Level	风量 Air Flow	风压 Air Pressure	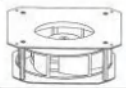	速度控制 Speed Control	接线图 Wiring Mode
dB(A)	m³/h	Pa	with support bracket		
72	1100	689	FK3G220-24PY-90	0-10VDC PWM Modbus485	S2
72	1100	689	FK3G220-48PY-90		S2
76	1100	820	FK3G220-85PY-90		S2
76	1100	820	FK3G220-110PY-90		S2

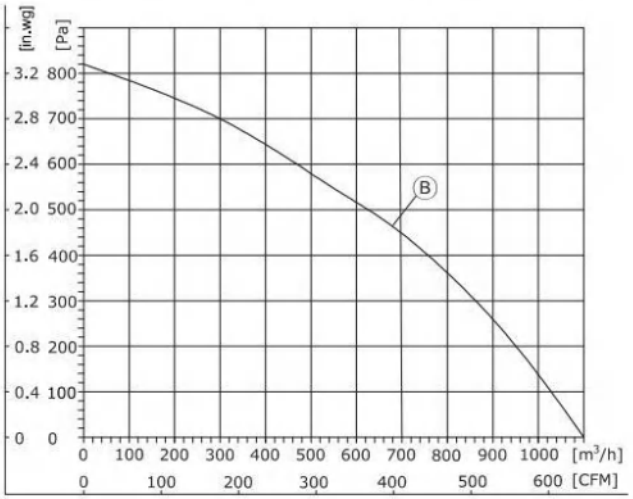

1、Air performance measured according to: ISO 5801, with DJ inlet ring without contact protection.
2、Intake-side sound level: LpA measured at 1 m distance from fan axis. The values given are only applicable under the specifi ed measuring conditions and may differ depending on the installation conditions.

(后向离心风机Centrifugal Fan)
FB3G220-24PY-90/FB3G220-48PY-90

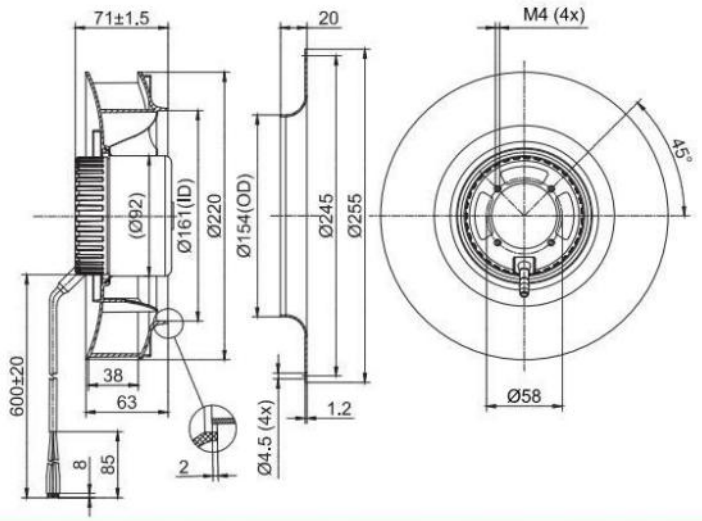

(后向离心风机Centrifugal Fan)
FB3G220-85PY-90/FB3G220-110PY-90

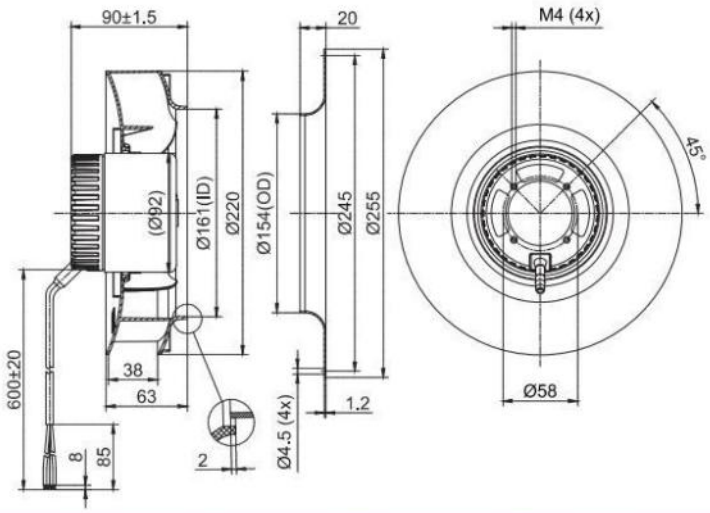

(支架离心风机Centrifugal Fan With Support Bracket)
FK3G220-24PY-90/FK3G220-48PY-90

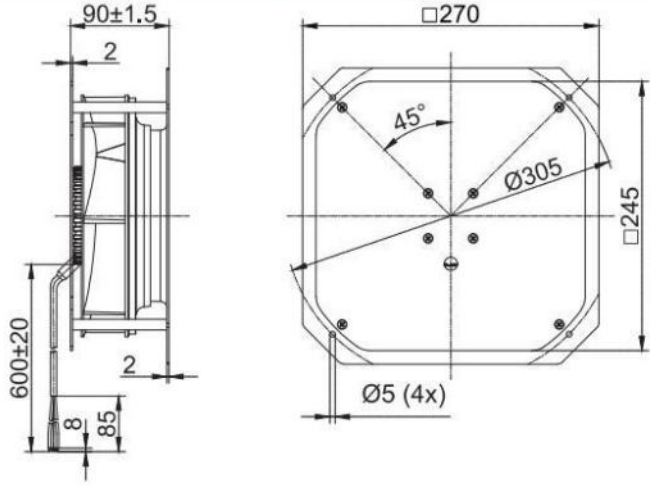

(支架离心风机Centrifugal Fan With Support Bracket)
FK3G220-85PY-90/FK3G220-110PY-90

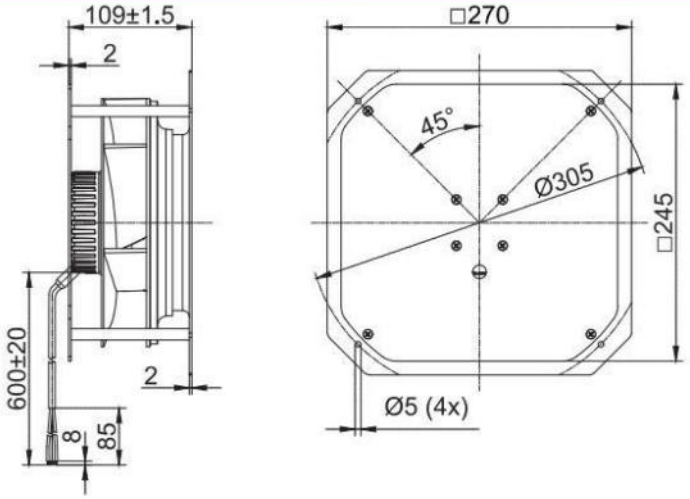

DC Centrifugal Fans



DC Backward Centrifugal Fans D225

- 材料**Material:** 塑料风轮Impeller: Plastic
  转子 Rotor: 电泳Electrophoresis
  端盖 Electronics housing: 压铸铝Die-cast aluminium
- 叶片数量**Number of blades:** 7
- 防护等级**Degree of protection:** IP 44
- 绝缘等级**Insulation class:** B
- 安装位置**Installation position:** 任意Any
- 模式**Mode:**连续工作制 Continuous operation (S1)

	电机 Motor	曲线 Curve	额定电压 Nominal Voltage	额定电压范围 Nominal Voltage Range	电流 Current	转速 Speed	输入功率 Max. input Power
Type			VDC	VDC	A	RPM	W
FB3G225-24PY-70	BLDC72	Ⓐ	24	16~28	4.8	2300	115
FB3G225-48PY-70	BLDC72	Ⓐ	48	36~57	2.4	2300	115
FB3G225-24PY-90	BLDC92	Ⓑ	24	16~28	6.0	2700	144
FB3G225-48PY-90	BLDC92	Ⓑ	48	36~57	3.0	2700	144
FB3G225-85PY-90	BLDC92	Ⓑ	85	68~102	1.7	2700	144
FB3G225-110PY-90	BLDC92	Ⓑ	110	77~138	1.3	2700	144

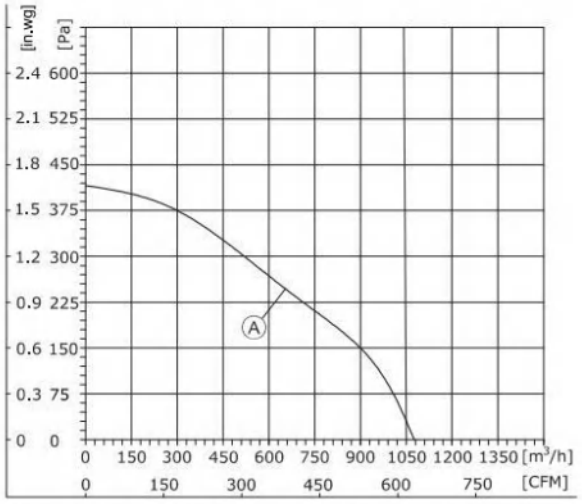

1、Air performance measured according to: ISO 5801, with DJ inlet ring without contact protection.
2、Intake-side sound level: LpA measured at 1 m distance from fan axis. The values given are only applicable under the specifi ed measuring conditions and may differ depending on the installation conditions.

DC Backward Centrifugal Fans D225

- 旋转方向**Direction of rotation:** 正转，从转子方向Clockwise，viewed toward rotor
- 技术特性**Technical features:** 参见附图See connection diagram
- 泄漏电流**Touch curren:** < 3,5 mA
- 能效**Efficiency:** ErP2015
- 标准/证书**Valid For Approval/Standard:** CE,RoHS,ISO9001
  环境温度**Perm. ambient temp.:** -25℃~+60℃
- 安装**Mounting:** 免维护滚珠轴承Maintenance-free ball bearings

噪音等级 Sound Pressure Level	风量 Air Flow	风压 Air Pressure	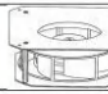	速度控制 Speed Control	接线图 Wiring Mode
dB(A)	m³/h	Pa	with support bracket		
67	1074	412	FK3G225-24PY-70	0-10VDC PWM Modbus485	S1
67	1074	412	FK3G225-48PY-70		S1
68.3	1202	514	FK3G225-24PY-90		S2
68.3	1202	514	FK3G225-48PY-90		S2
68.3	1202	514	FK3G225-85PY-90		S2
68.3	1202	514	FK3G225-110PY-90		S2

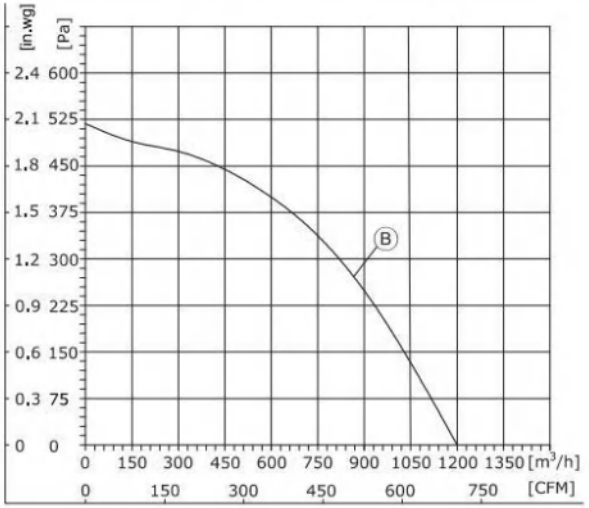

1、Air performance measured according to: ISO 5801, with DJ inlet ring without contact protection.
2、Intake-side sound level: LpA measured at 1 m distance from fan axis. The values given are only applicable under the specifi ed measuring conditions and may differ depending on the installation conditions.

(后向离心风机Centrifugal Fan)
FB3G225-24PY-70/FB3G225-48PY-70

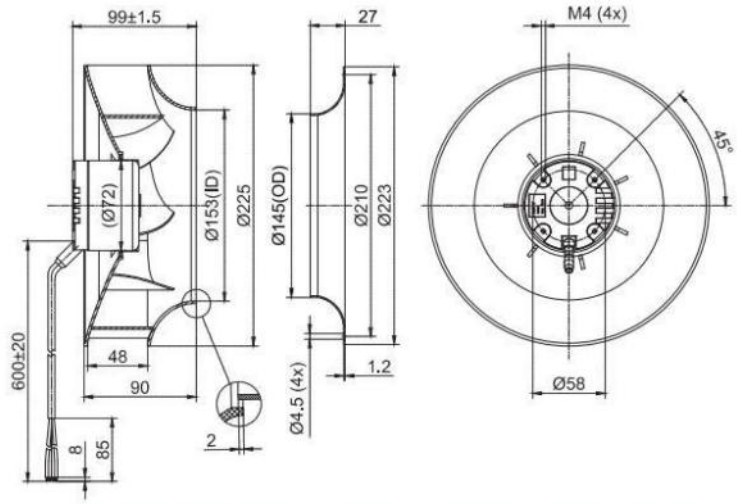

(后向离心风机Centrifugal Fan)
FB3G225-24PY-90/FB3G225-48PY-90/FB3G225-85PY-90/FB3G225-110PY-90

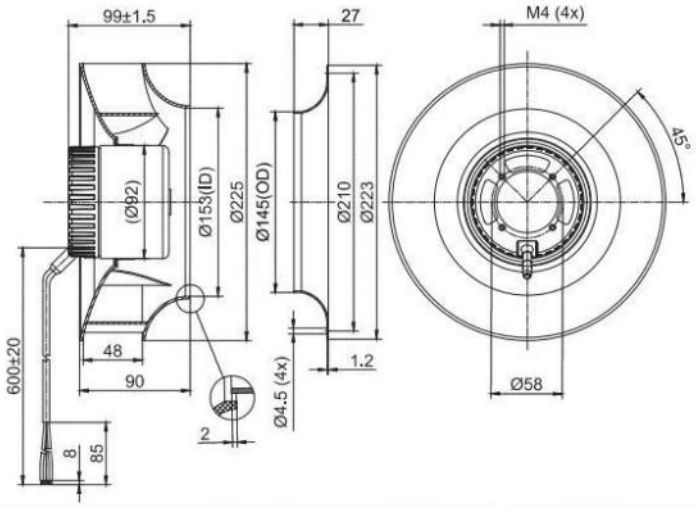

(支架离心风机Centrifugal Fan With Support Bracket)
FK3G225-24PY-70/FK3G225-48PY-70

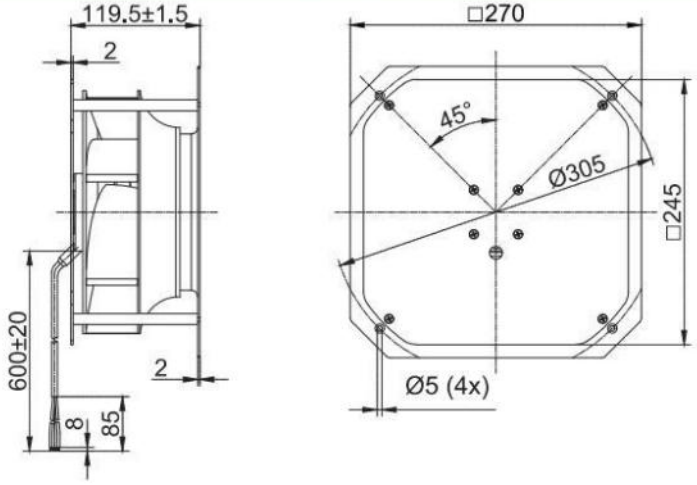

(支架离心风机Centrifugal Fan With Support Bracket)
FK3G225-24PY-90/FK3G225-48PY-90/FK3G225-85PY-90/FK3G225-110PY-90

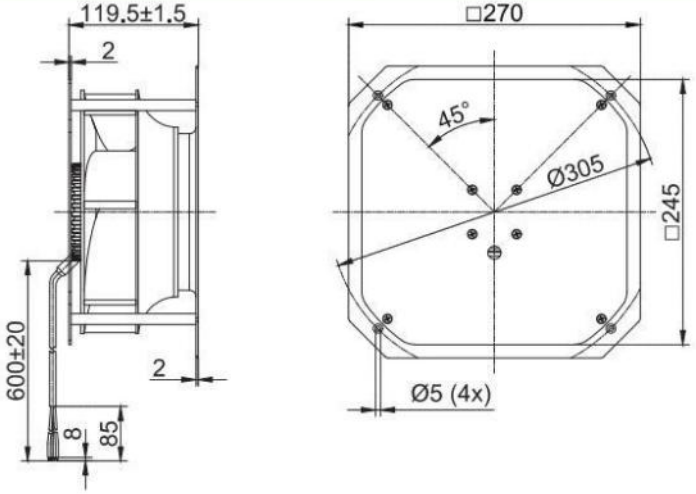

DC Centrifugal Fans



DC Backward Centrifugal Fans D250

- 材料**Material:** 塑料风轮Impeller: Plastic
  转子 Rotor: 电泳Electrophoresis
  端盖 Electronics housing: 压铸铝Die-cast aluminium
- 叶片数量**Number of blades:** 7
- 防护等级**Degree of protection:** IP 44
- 绝缘等级**Insulation class:** B
- 安装位置**Installation position:** 任意Any
- 模式**Mode:**连续工作制 Continuous operation (S1)

	电机 Motor	曲线 Curve	额定电压 Nominal Voltage	额定电压范围 Nominal Voltage Range	电流 Current	转速 Speed	输入功率 Max. input Power
Type			VDC	VDC	A	RPM	W
FB3G250-24PL-90	BLDC92	Ⓐ	24	16~28	3.5	2150	85
FB3G250-48PL-90	BLDC92	Ⓐ	48	36~57	1.75	2150	85
FB3G250-24PL-91	BLDC92	Ⓑ	24	16~28	8.0	2950	192
FB3G250-48PL-91	BLDC92	Ⓑ	48	36~57	4.0	2950	192
FB3G250-48PL-20	BLDC102	Ⓒ	48	36~57	8.75	3720	420
FB3G250-85PL-20	BLDC102	Ⓒ	85	68~102	5.0	3720	420
FB3G250-110PL-20	BLDC102	Ⓒ	110	77~138	3.82	3720	420

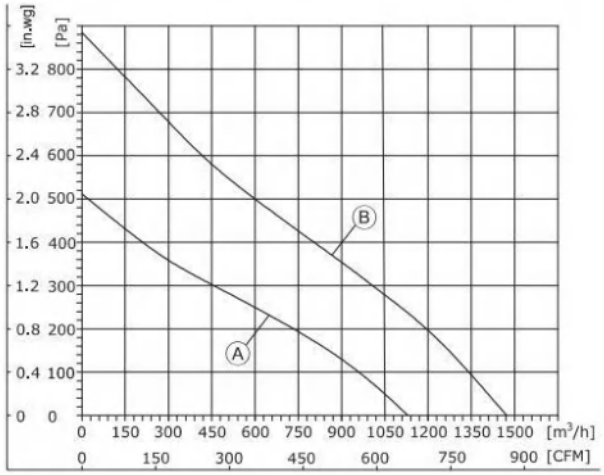

1、Air performance measured according to: ISO 5801, with DJ inlet ring without contact protection.
2、Intake-side sound level: LpA measured at 1 m distance from fan axis. The values given are only applicable under the specifi ed measuring conditions and may differ depending on the installation conditions.

DC Backward Centrifugal Fans D250

- 旋转方向**Direction of rotation:** 正转，从转子方向Clockwise，viewed toward rotor
- 技术特性**Technical features:** 参见附图See connection diagram
- 泄漏电流**Touch curren:** < 3,5 mA
- 能效**Efficiency:** ErP2015
- 标准/证书**Valid For Approval/Standard**：CE,RoHS,ISO9001
  环境温度**Perm. ambient temp.**：.-25℃~+60℃
- 安装**Mounting:** 免维护滚珠轴承Maintenance-free ball bearings

噪音等级 Sound Pressure Level	风量 Air Flow	风压 Air Pressure	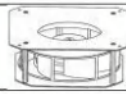	速度控制 Speed Control	接线图 Wiring Mode
dB(A)	m³/h	Pa	with support bracket		
66	1132	508	FK3G250-24PL-90	0-10VDC PWM Modbus485	S2
66	1132	508	FK3G250-48PL-90		S2
71	1475	885	FK3G250-24PL-91		S2
71	1475	885	FK3G250-48PL-91		S2
83.3	1941	1248	FK3G250-48PL-20		S3
83.3	1941	1248	FK3G250-85PL-20		S3
83.3	1941	1248	FK3G250-110PL-20		S3

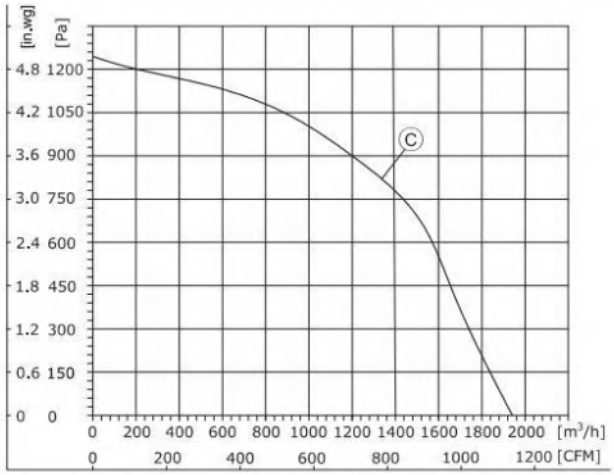

1、Air performance measured according to: ISO 5801, with DJ inlet ring without contact protection.
2、Intake-side sound level: LpA measured at 1 m distance from fan axis. The values given are only applicable under the specifi ed measuring conditions and may differ depending on the installation conditions.

(后向离心风机Centrifugal Fan)
FB3G250-24PL-90/FB3G250-48PL-90

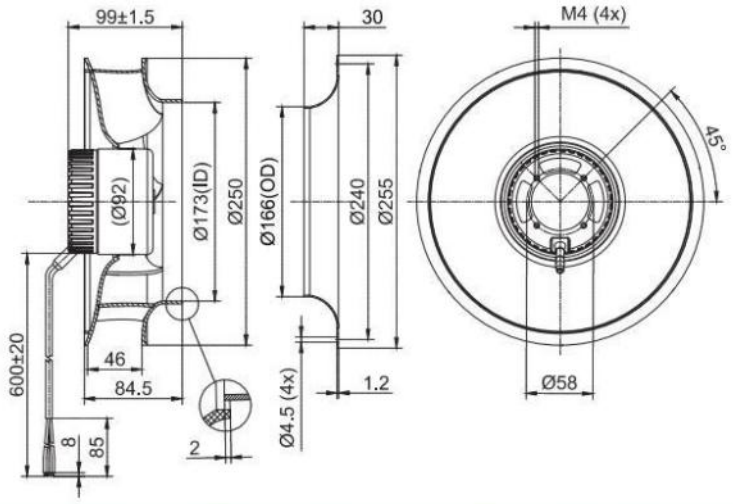

(后向离心风机Centrifugal Fan)
FB3G250-24PL-91/FB3G250-48PL-91

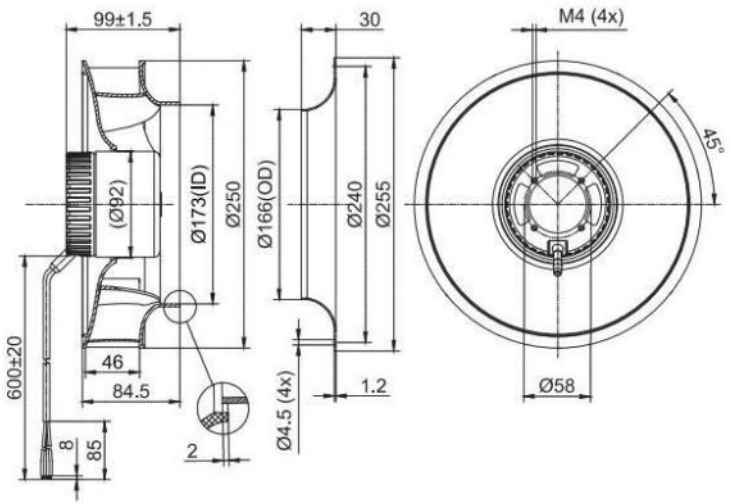

(支架离心风机Centrifugal Fan With Support Bracket)
FK3G250-24PL-90/FK3G250-48PL-90

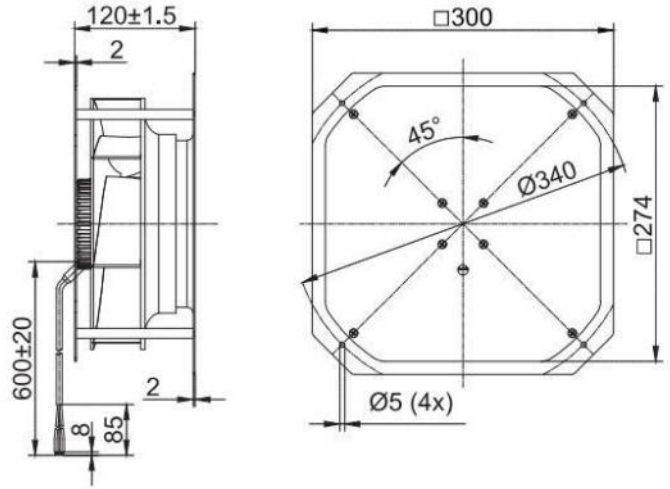

(支架离心风机Centrifugal Fan With Support Bracket)
FK3G250-24PL-91/FK3G250-48PL-91

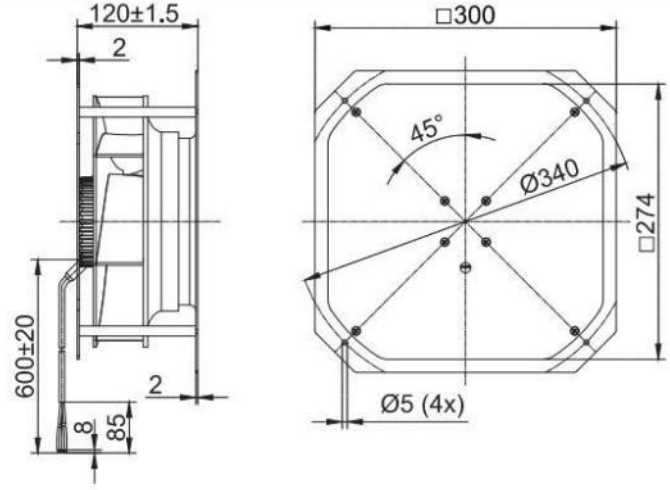

(后向离心风机Centrifugal Fan)
FB3G250-48PL-20/FB3G250-85PL-20/FB3G250-110PL-20

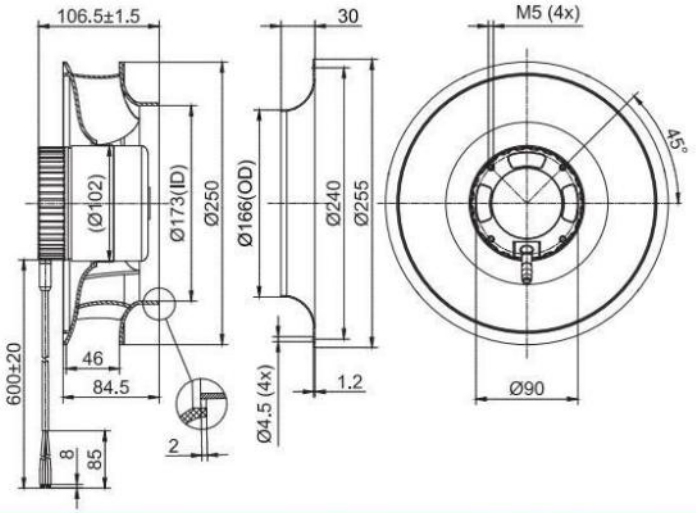

(支架离心风机Centrifugal Fan With Support Bracket)
FK3G250-48PL-20/FK3G250-85PL-20/FK3G250-110PL-20

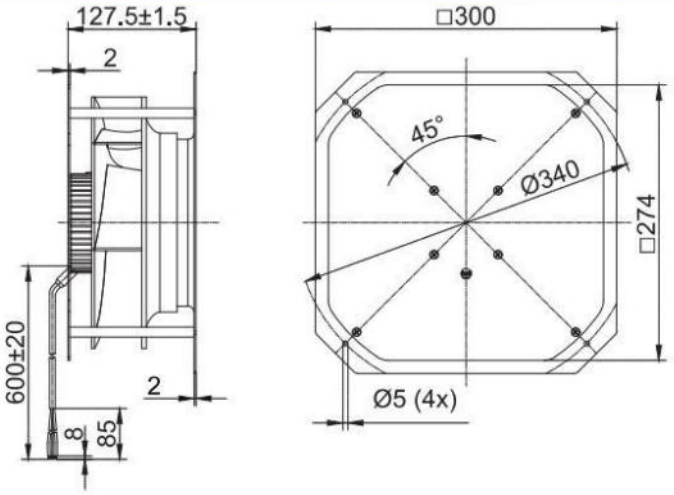

DC Centrifugal Fans



DC Backward Centrifugal Fans D280

- 材料**Material:** 塑料风轮Impeller: Plastic
  转子 Rotor: 电泳Electrophoresis
  端盖 Electronics housing: 压铸铝Die-cast aluminium
- 叶片数量**Number of blades:** 6
- 防护等级**Degree of protection:** IP 44
- 绝缘等级**Insulation class:** B
- 安装位置**Installation position:** 任意Any
- 模式**Mode:**连续工作制 Continuous operation (S1)

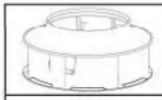	电机 Motor	曲线 Curve	额定电压 Nominal Voltage	额定电压范围 Nominal Voltage Range	电流 Current	转速 Speed	输入功率 Max. input Power
Type			VDC	VDC	A	RPM	W
FB3G280-24PL-90	BLDC92	Ⓐ	24	16~28	7.1	1900	170
FB3G280-48PL-90	BLDC92	Ⓐ	48	36~57	3.55	1900	170
FB3G280-48PL-20	BLDC102	Ⓑ	48	36~57	8.2	2610	395
FB3G280-85PL-20	BLDC102	Ⓑ	85	68~102	4.65	2610	395
FB3G280-110PL-20	BLDC102	Ⓑ	110	77~138	3.6	2610	395

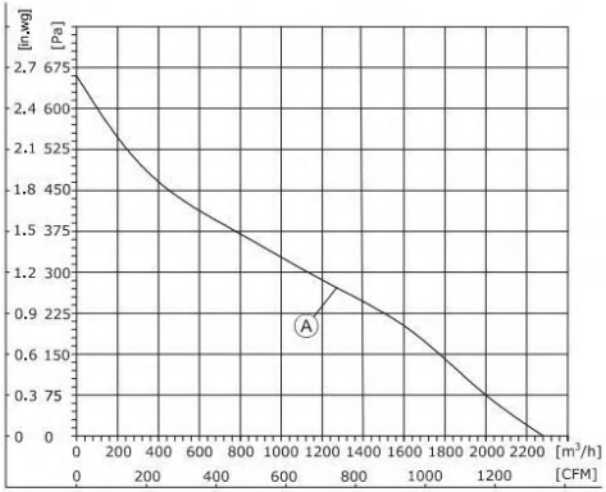

1、Air performance measured according to: ISO 5801, with DJ inlet ring without contact protection.
2、Intake-side sound level: LpA measured at 1 m distance from fan axis. The values given are only applicable under the specifi ed measuring conditions and may differ depending on the installation conditions.

DC Backward Centrifugal Fans D280

- 旋转方向**Direction of rotation:** 正转，从转子方向Clockwise，viewed toward rotor
- 技术特性**Technical features:** 参见附图See connection diagram
- 泄漏电流**Touch curren:** < 3,5 mA
- 能效**Efficiency:** ErP2015
- 标准/证书**Valid For Approval/Standard**：CE,RoHS,ISO9001
  环境温度**Perm. ambient temp.**：.-25℃~+60℃
- 安装**Mounting:** 免维护滚珠轴承Maintenance-free ball bearings

噪音等级 Sound Pressure Level	风量 Air Flow	风压 Air Pressure	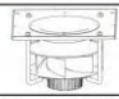	速度控制 Speed Control	接线图 Wiring Mode
dB(A)	m³/h	Pa	with support bracket		
69.9	2286	661	FK3G280-24PL-90	0-10VDC PWM Modbus485	S2
69.9	2286	661	FK3G280-48PL-90		S2
78	3084	777	FK3G280-48PL-20		S3
78	3084	777	FK3G280-85PL-20		S3
78	3084	777	FK3G280-110PL-20		S3

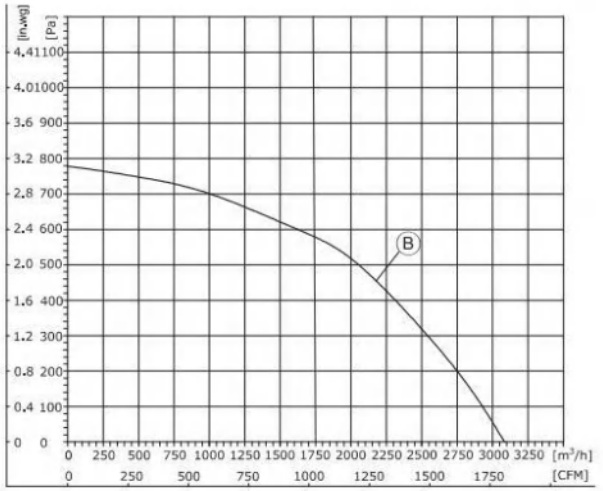

1、Air performance measured according to: ISO 5801, with DJ inlet ring without contact protection.
2、Intake-side sound level: LpA measured at 1 m distance from fan axis. The values given are only applicable under the specifi ed measuring conditions and may differ depending on the installation conditions.

(后向离心风机Centrifugal Fan)
FB3G280-24PL-90/FB3G280-48PL-90

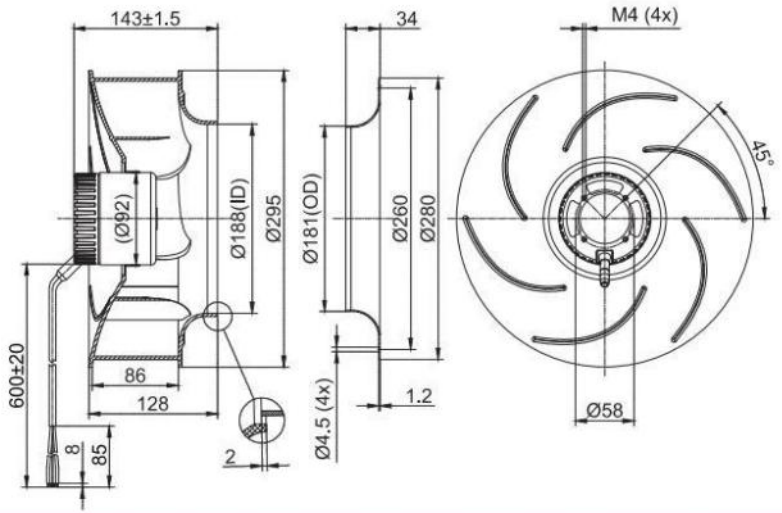

(后向离心风机Centrifugal Fan)
FB3G280-48PL-20/FB3G280-85PL-20/FB3G280-110PL-20

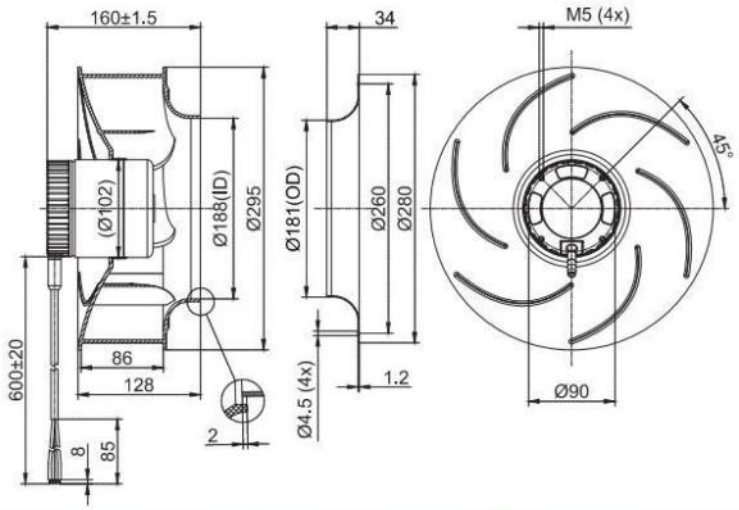

(支架离心风机Centrifugal Fan With Support Bracket)
FK3G280-24PL-90/FK3G280-48PL-90

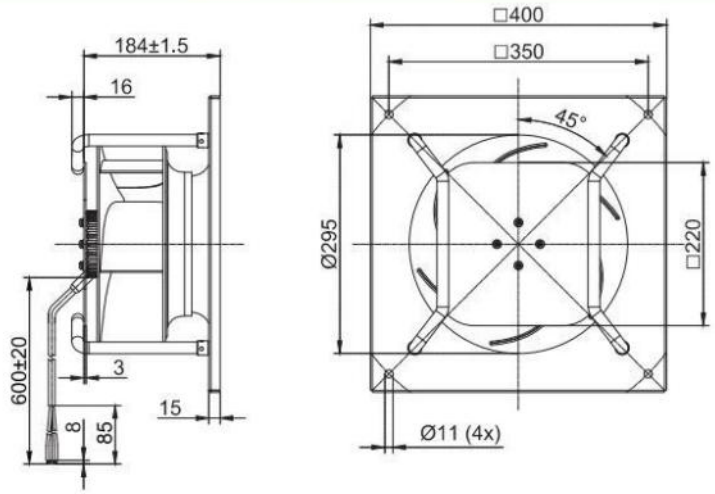

(支架离心风机Centrifugal Fan With Support Bracket)
FK3G280-48PL-20/FK3G280-85PL-20/FK3G280-110PL-20

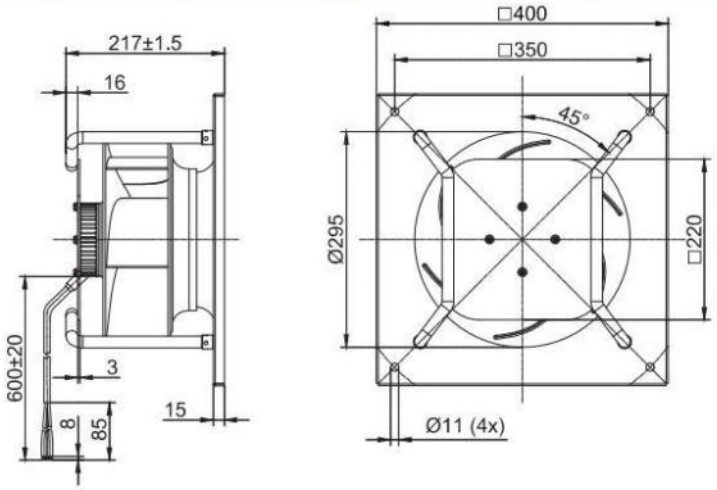



DC Backward Centrifugal Fans D310

- 材料**Material:** 塑料/铝合金 风轮Impeller: Plastic/Aluminium alloy
  转子 Rotor: 电泳Electrophoresis
  端盖 Electronics housing: 压铸铝Die-cast aluminium
- 叶片数量**Number of blades:** 6/7
- 防护等级**Degree of protection:** IP 44
- 绝缘等级**Insulation class:** B
- 安装位置**Installation position:** 任意Any
- 模式**Mode:**连续工作制 Continuous operation (S1)

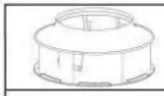	电机 **Motor**	曲线 **Curve**	额定电压 **Nominal Voltage**	额定电压范围 **Nominal Voltage Range**	电流 **Current**	转速 **Speed**	输入功率 **Max. input Power**
Type			VDC	VDC	A	RPM	W
FB3G310-24AL-90	BLDC92	A	24	16~28	5.6	1720	135
FB3G310-48AL-90	BLDC92	A	48	36~57	2.8	1720	135
FB3G310-24AY-90	BLDC92	B	24	16~28	5.2	1600	125
FB3G310-48AY-90	BLDC92	B	48	36~57	2.6	1600	125
FB3G310-48AL-21	BLDC102	C	48	36~57	6.7	2550	321
FB3G310-48AY-20	BLDC102	D	48	36~57	4.5	1930	216
FB3G310-48AY-21	BLDC102	E	48	36~57	7.0	2200	336
FB3G310-48PK-20	BLDC102	F	48	36~57	3.15	1520	150

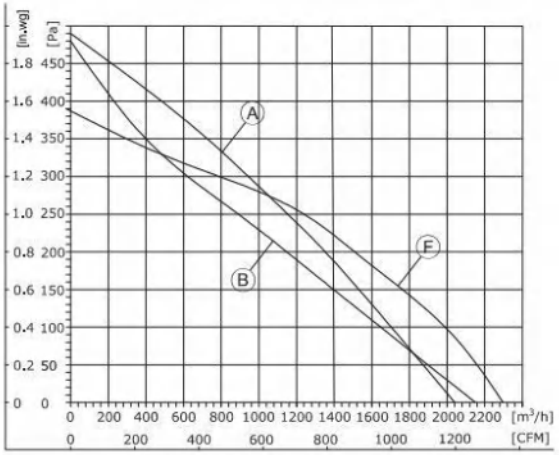

1、Air performance measured according to: ISO 5801, with DJ inlet ring without contact protection.
2、Intake-side sound level: LpA measured at 1 m distance from fan axis. The values given are only applicable under the specifi ed measuring conditions and may differ depending on the installation conditions.

DC Backward Centrifugal Fans D310

- 旋转方向**Direction of rotation:** 正转，从转子方向Clockwise，viewed toward rotor
- 技术特性**Technical features:** 参见附图See connection diagram
- 泄漏电流**Touch curren:** < 3,5 mA
- 能效**Efficiency:** ErP2015
- 标准/证书**Valid For Approval/Standard**：CE,RoHS,ISO9001
  环境温度**Perm. ambient temp.**：.-25℃~+60℃
- 安装**Mounting:** 免维护滚珠轴承Maintenance-free ball bearings

噪音等级 **Sound Pressure Level**	风量 **Air Flow**	风压 **Air Pressure**	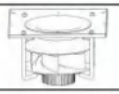	速度控制 **Speed Control**	接线图 **Wiring Mode**
dB(A)	m³/h	Pa	with support bracket		
67	2050	490	FK3G310-24AL-90	0-10VDC PWM Modbus485	S2
67	2050	490	FK3G310-48AL-90		S2
64	2150	480	FK3G310-24AY-90		S2
64	2150	480	FK3G310-48AY-90		S2
73	2750	865	FK3G310-48AL-21		S3
66	2616	550	FK3G310-48AY-20		S3
69	3020	665	FK3G310-48AY-21		S3
69	2320	390	FK3G310-48PK-20		S3

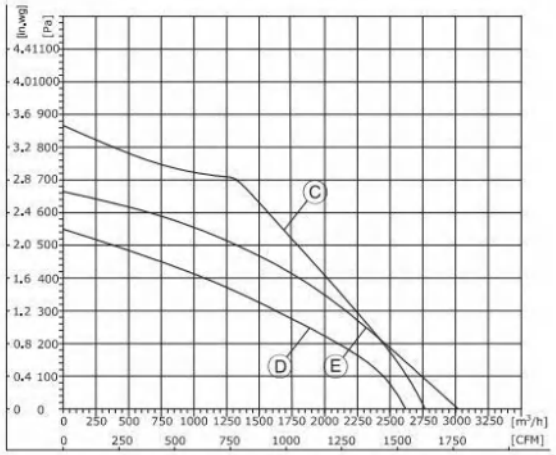

1、Air performance measured according to: ISO 5801, with DJ inlet ring without contact protection.
2、Intake-side sound level: LpA measured at 1 m distance from fan axis. The values given are only applicable under the specifi ed measuring conditions and may differ depending on the installation conditions.

(后向离心风机Centrifugal Fan)
FB3G310-24AL-90/FB3G310-48AL-90

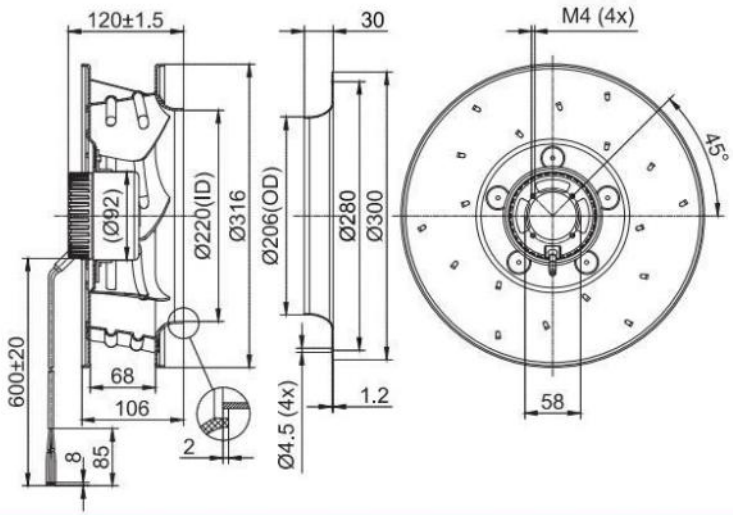

(后向离心风机Centrifugal Fan)
FB3G310-24AY-90/FB3G310-48AY-90

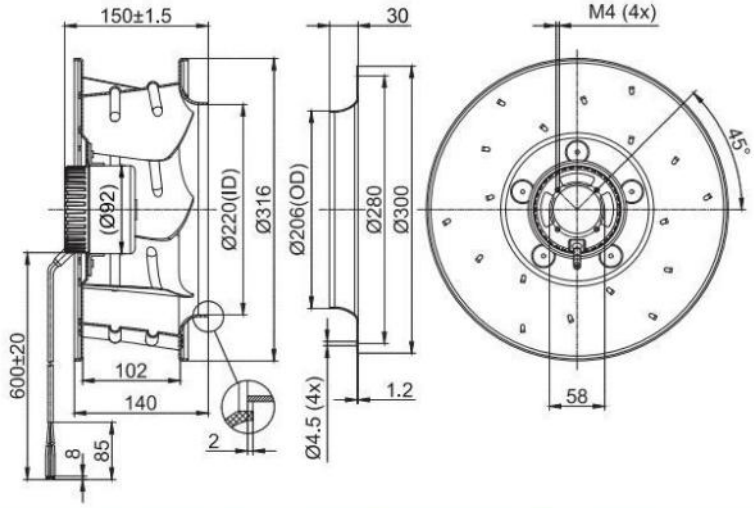

(支架离心风机Centrifugal Fan With Support Bracket)
FK3G310-24AL-90/FK3G310-48AL-90

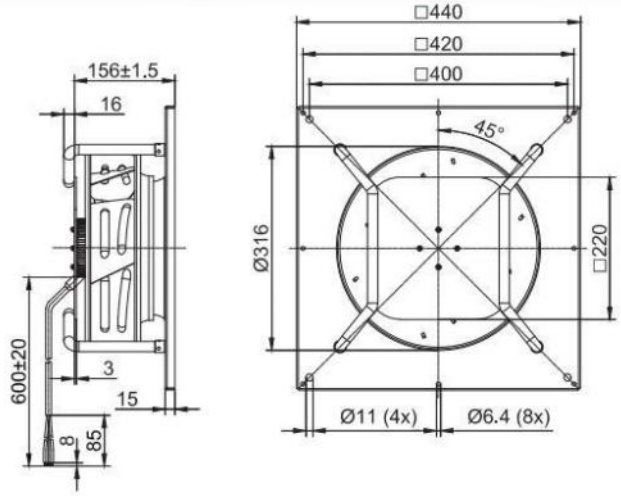

(支架离心风机Centrifugal Fan With Support Bracket)
FK3G310-24AY-90/FK3G310-48AY-90

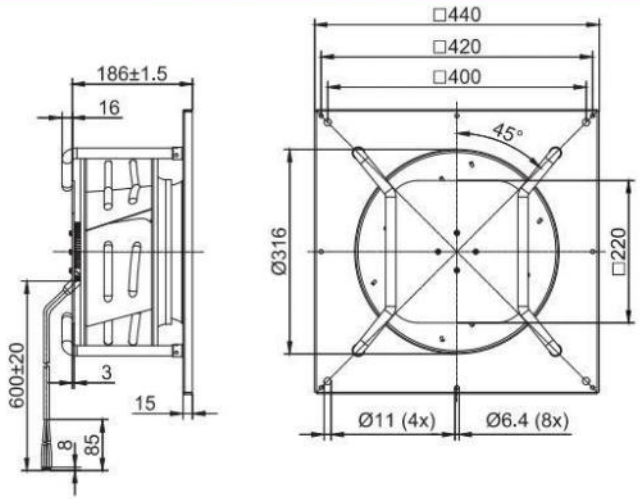

(后向离心风机Centrifugal Fan)
FB3G310-48AL-21

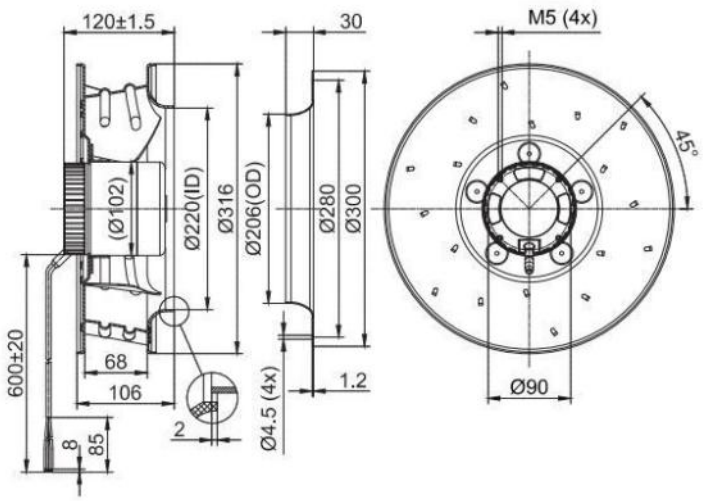

(后向离心风机Centrifugal Fan)
FB3G310-48AY-20

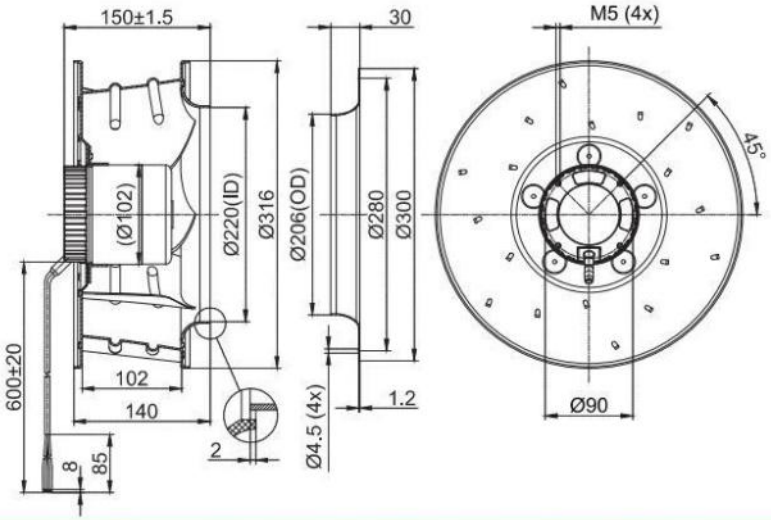

(支架离心风机Centrifugal Fan With Support Bracket)
FK3G310-48AL-21

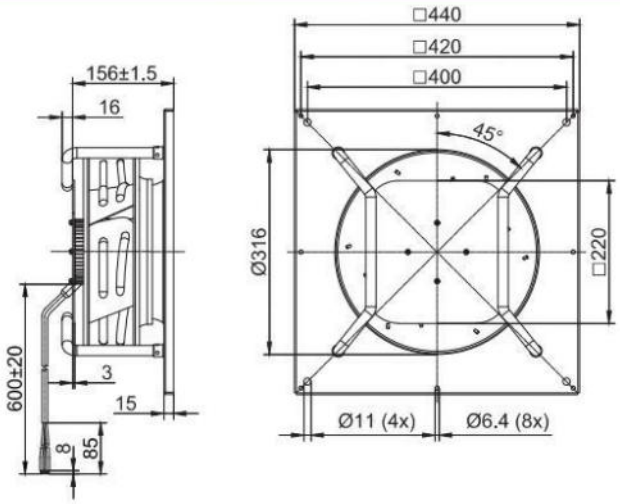

(支架离心风机Centrifugal Fan With Support Bracket)
FK3G310-48AY-20

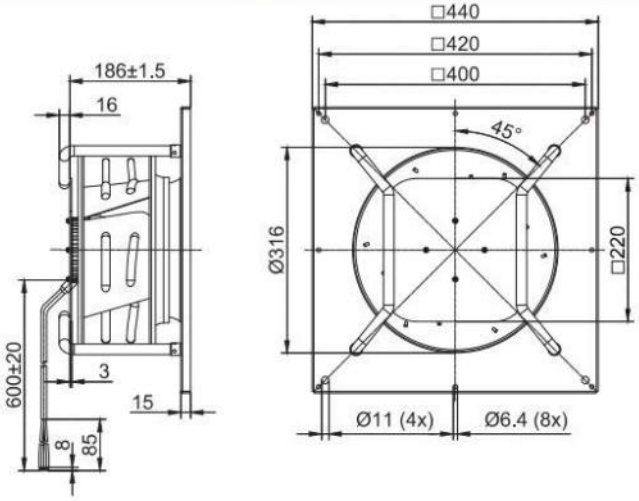

(后向离心风机Centrifugal Fan)
FB3G310-48AY-21

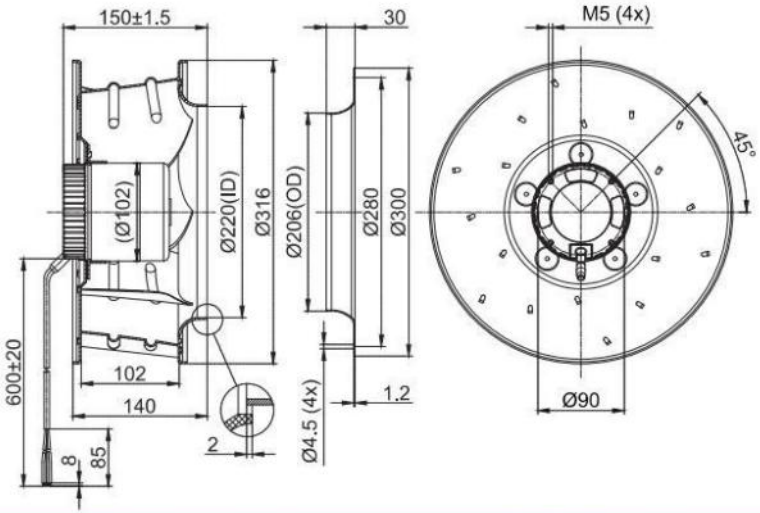

(后向离心风机Centrifugal Fan)
FB3G310-48PK-20

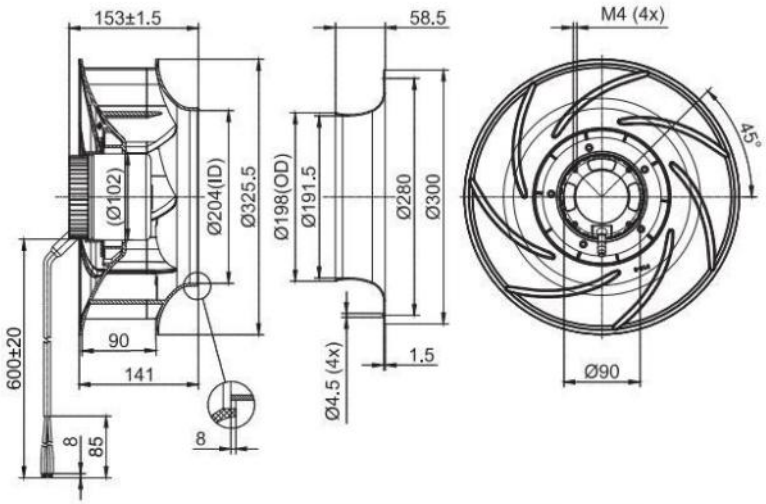

(支架离心风机Centrifugal Fan With Support Bracket)
FK3G310-48AY-21

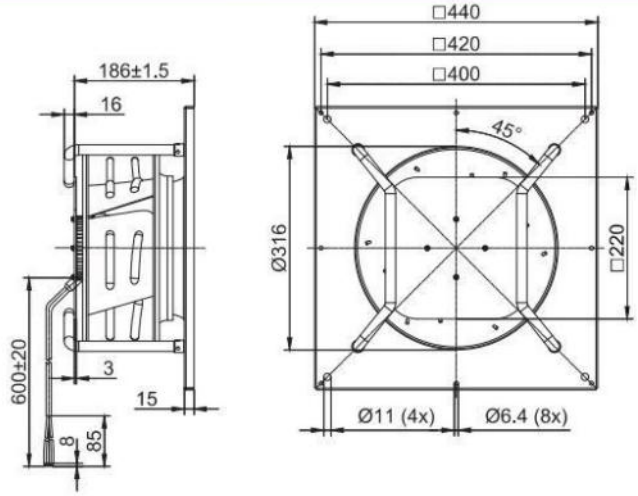

(支架离心风机Centrifugal Fan With Support Bracket)
FK3G310-48PK-20

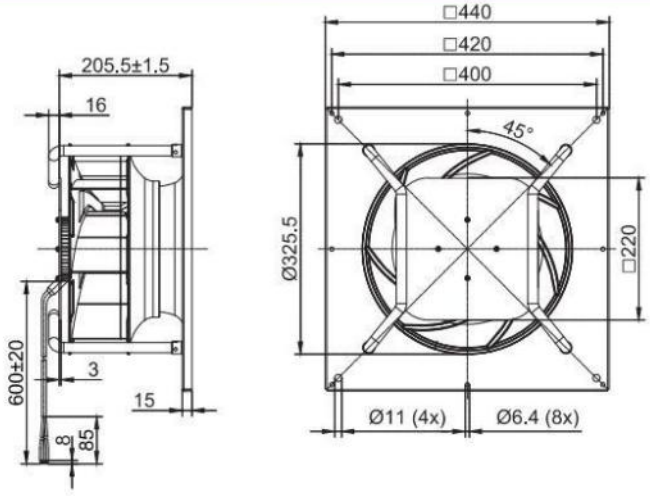



DC Backward Centrifugal Fans D355

- 材料**Material:** 塑料/铝合金 风轮Impeller: Plastic/Aluminium alloy
  转子 Rotor: 电泳Electrophoresis
  端盖 Electronics housing: 压铸铝Die-cast aluminium
- 叶片数量**Number of blades:** 6/7
- 防护等级**Degree of protection:** IP 44
- 绝缘等级**Insulation class:** B
- 安装位置**Installation position:** 任意Any
- 模式**Mode:**连续工作制 Continuous operation (S1)

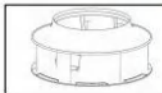	电机 **Motor**	曲线 **Curve**	额定电压 **Nominal Voltage**	额定电压范围 **Nominal Voltage Range**	电流 **Current**	转速 **Speed**	输入功率 **Max. input Power**
Type			VDC	VDC	A	RPM	W
FB3G355-48AL-20	BLDC102	Ⓐ	48	36~57	6.6	2000	320
FB3G355-48AY-20	BLDC102	Ⓑ	48	36~57	3.5	1750	340
FB3G355-48PK-20	BLDC102	Ⓒ	48	36~57	5.2	1450	250

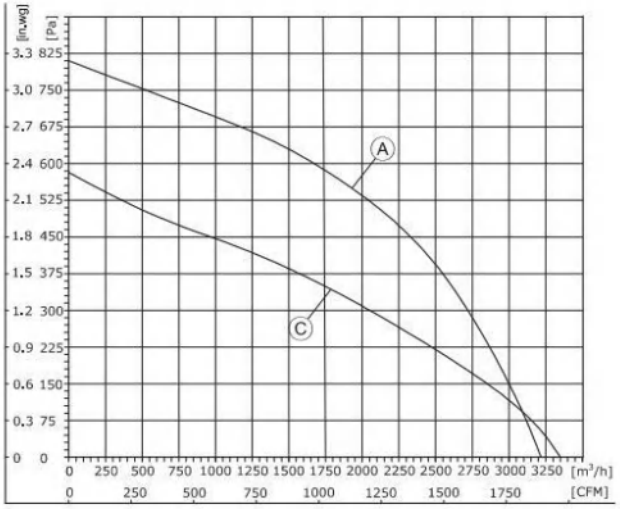

1、Air performance measured according to: ISO 5801, with DJ inlet ring without contact protection.
2、Intake-side sound level: LpA measured at 1 m distance from fan axis. The values given are only applicable under the specifi ed measuring conditions and may differ depending on the installation conditions.

DC Backward Centrifugal Fans D355

- 旋转方向**Direction of rotation:** 正转，从转子方向Clockwise，viewed toward rotor
- 技术特性**Technical features:** 参见附图See connection diagram
- 泄漏电流**Touch curren:** < 3,5 mA
- 能效**Efficiency:** ErP2015
- 标准/证书**Valid For Approval/Standard**：CE,RoHS,ISO9001
  环境温度**Perm. ambient temp.**：.-25℃~+60℃
- 安装**Mounting:** 免维护滚珠轴承Maintenance-free ball bearings

噪音等级 **Sound Pressure Level**	风量 **Air Flow**	风压 **Air Pressure**		速度控制 **Speed Control**	接线图 **Wiring Mode**
dB(A)	m³/h	Pa	with support bracket		
71	3230	810	FK3G355-48AL-20	0-10VDC PWM Modbus485	S3
70	3350	580	FK3G355-48AY-20		S3
77	3600	580	FK3G310-48PK-20		S3

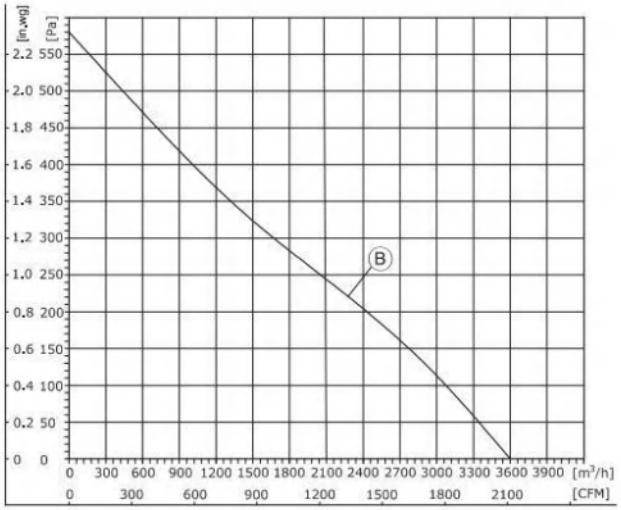

1、Air performance measured according to: ISO 5801, with DJ inlet ring without contact protection.
2、Intake-side sound level: LpA measured at 1 m distance from fan axis. The values given are only applicable under the specifi ed measuring conditions and may differ depending on the installation conditions.

(后向离心风机Centrifugal Fan)
FB3G355-48AL-20

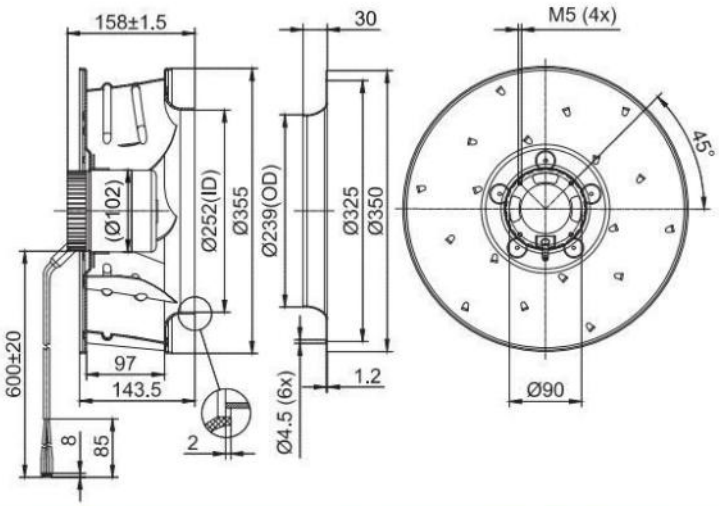

(后向离心风机Centrifugal Fan)
FB3G355-48AY-20

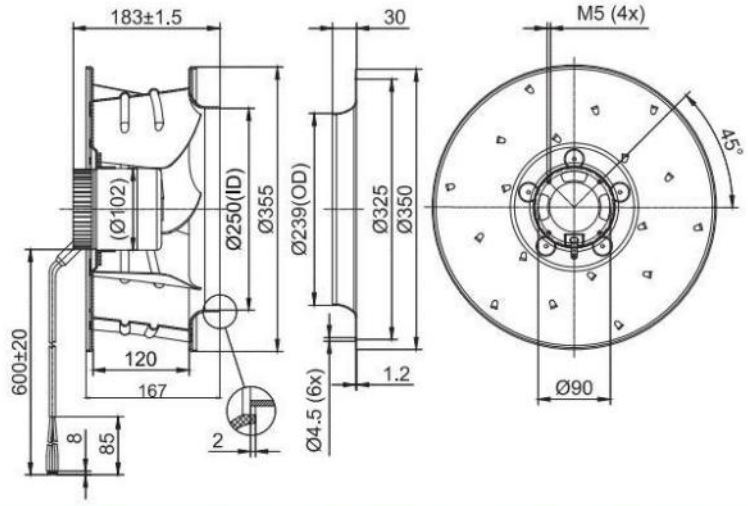

(支架离心风机Centrifugal Fan With Support Bracket)
FK3G355-48AL-20

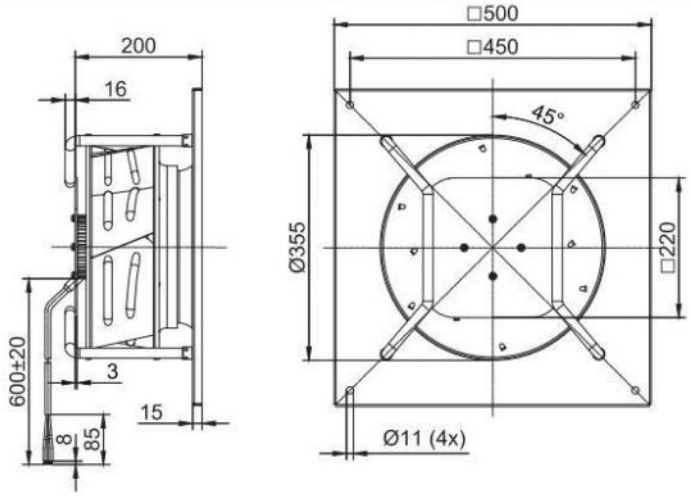

(支架离心风机Centrifugal Fan With Support Bracket)
FK3G355-48AY-20

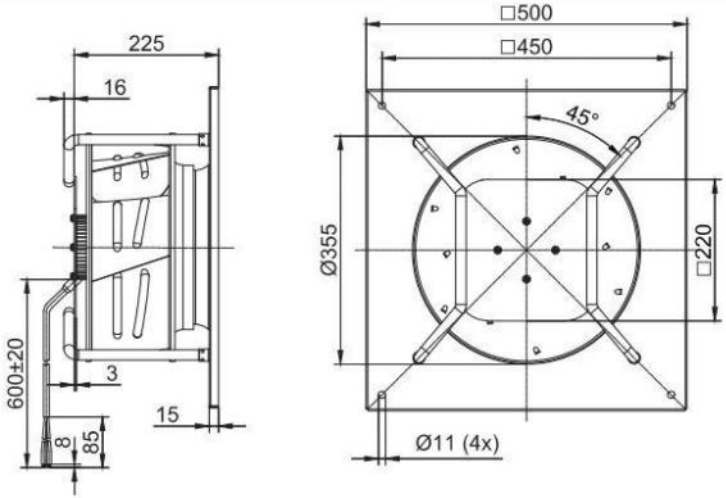

(后向离心风机Centrifugal Fan)
FB3G355-48PK-20

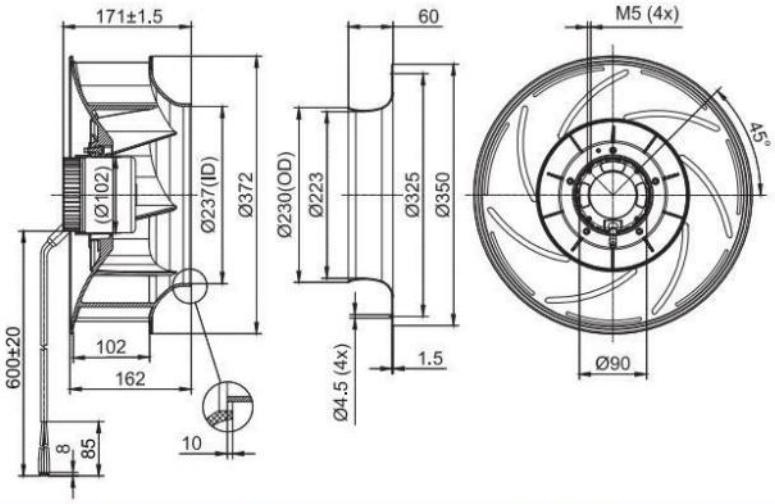

(支架离心风机Centrifugal Fan With Support Bracket)
FK3G355-48PK-20

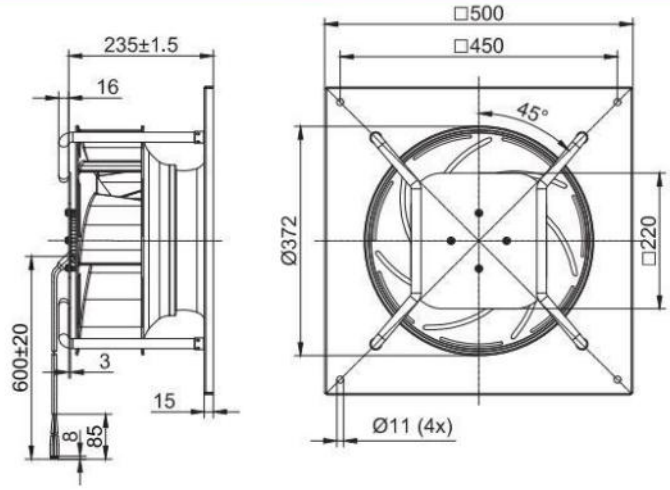

DC Centrifugal Fans



DC Backward Centrifugal Fans D400

- 材料**Material:** 塑料/铝合金 风轮Impeller: Plastic/Aluminium alloy
  转子 Rotor: 电泳Electrophoresis
  端盖 Electronics housing: 压铸铝Die-cast aluminium
- 叶片数量**Number of blades:** 7
- 防护等级**Degree of protection:** IP 44
- 绝缘等级**Insulation class:** B
- 安装位置**Installation position:** 任意Any
- 模式**Mode:**连续工作制 Continuous operation (S1)

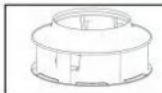	电机 **Motor**	曲线 **Curve**	额定电压 **Nominal Voltage**	额定电压范围 **Nominal Voltage Range**	电流 **Current**	转速 **Speed**	输入功率 **Max. input Power**
Type			VDC	VDC	A	RPM	W
FB3G400-48AP-20	BLDC102	Ⓐ	48	36~57	5.8	1460	275
FB3G400-48PK-20	BLDC102	Ⓑ	48	36~57	5.2	1170	250

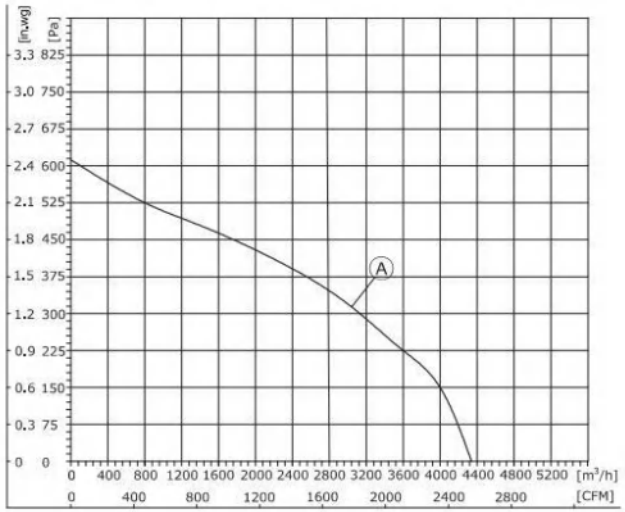

1、Air performance measured according to: ISO 5801, with DJ inlet ring without contact protection.
2、Intake-side sound level: LpA measured at 1 m distance from fan axis. The values given are only applicable under the specifi ed measuring conditions and may differ depending on the installation conditions.

DC Backward Centrifugal Fans D400

- 旋转方向**Direction of rotation:** 正转，从转子方向Clockwise，viewed toward rotor
- 技术特性**Technical features:** 参见附图See connection diagram
- 泄漏电流**Touch curren:** < 3,5 mA
- 能效**Efficiency:** ErP2015
- 标准/证书**Valid For Approval/Standard**：CE,RoHS,ISO9001
  环境温度**Perm. ambient temp.**：.-25℃~+60℃
- 安装**Mounting:** 免维护滚珠轴承Maintenance-free ball bearings

噪音等级 **Sound Pressure Level**	风量 **Air Flow**	风压 **Air Pressure**	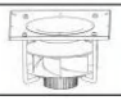	速度控制 **Speed Control**	接线图 **Wiring Mode**
dB(A)	m³/h	Pa	with support bracket		
75.8	4347	609	FK3G400-48AP-20	0-10VDC PWM Modbus485	S3
75	4320	445	FK3G400-48PK-20		S3

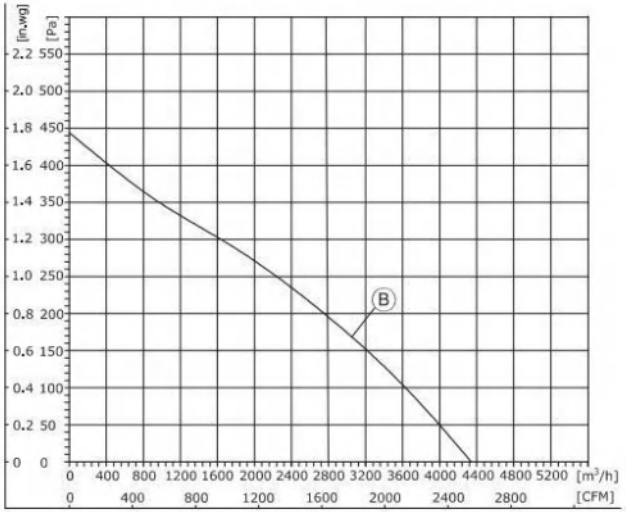

1、Air performance measured according to: ISO 5801, with DJ inlet ring without contact protection.
2、Intake-side sound level: LpA measured at 1 m distance from fan axis. The values given are only applicable under the specifi ed measuring conditions and may differ depending on the installation conditions.

(后向离心风机Centrifugal Fan)
FB3G400-48AP-20

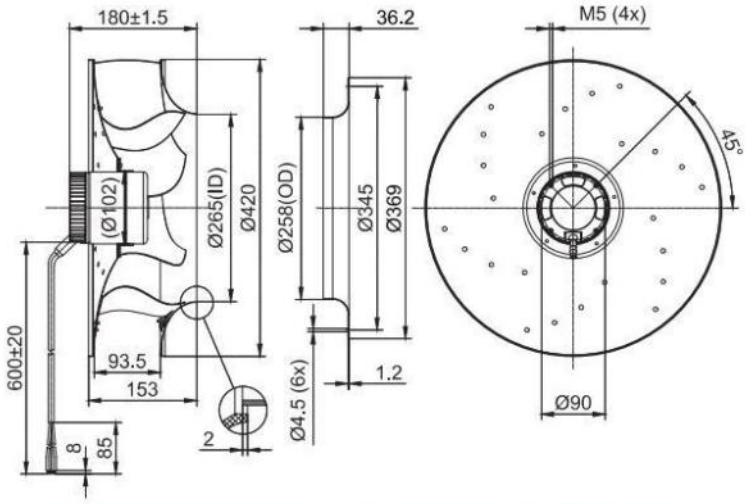

(后向离心风机Centrifugal Fan)
FB3G400-48PK-20

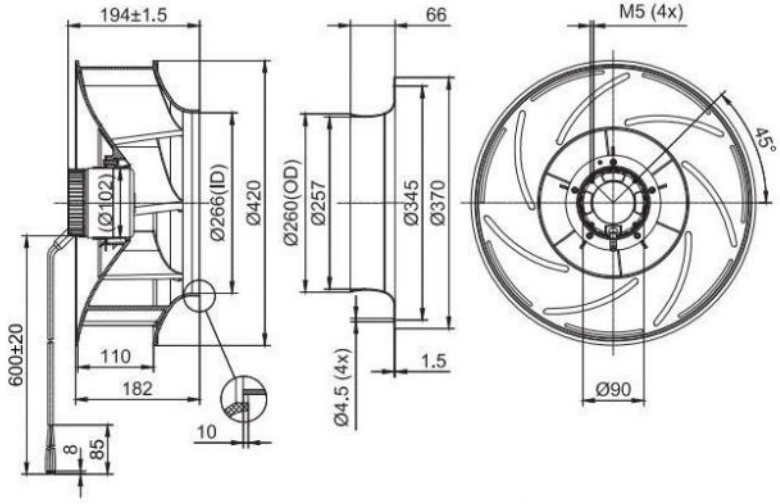

(支架离心风机Centrifugal Fan With Support Bracket)
FK3G400-48AP-20

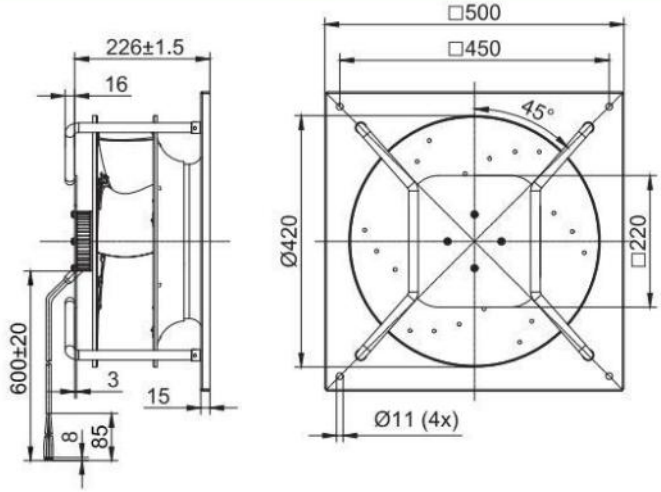

(支架离心风机Centrifugal Fan With Support Bracket)
FK3G400-48PK-20

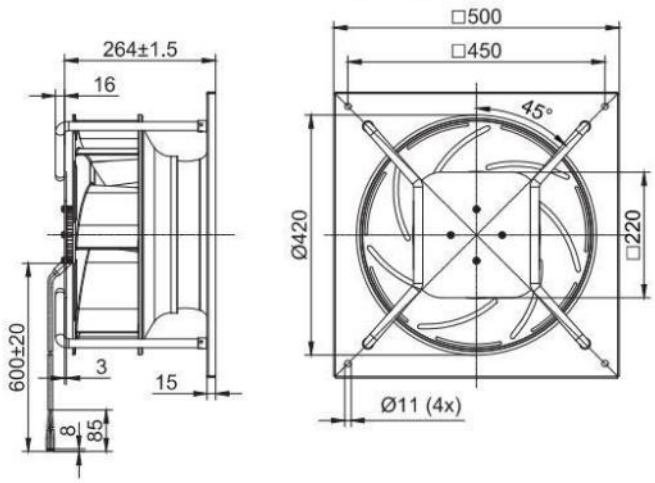



DC Backward Centrifugal Fans D450

- 材料**Material:** 铝合金 风轮Impeller: Aluminium alloy
  转子 Rotor: 电泳Electrophoresis
  端盖 Electronics housing: 压铸铝Die-cast aluminium
- 叶片数量**Number of blades:** 6
- 防护等级**Degree of protection:** IP 44
- 绝缘等级**Insulation class:** B
- 安装位置**Installation position:** 任意Any
- 模式**Mode:**连续工作制 Continuous operation (S1)

DC Backward Centrifugal Fans D450

- 旋转方向**Direction of rotation:** 正转，从转子方向Clockwise，viewed toward rotor
- 技术特性**Technical features:** 参见附图See connection diagram
- 泄漏电流**Touch curren:** < 3,5 mA
- 能效**Efficiency:** ErP2015
- 标准/证书**Valid For Approval/Standard**：CE,RoHS,ISO9001
  环境温度**Perm. ambient temp.**：-25℃~+60℃
- 安装**Mounting:** 免维护滚珠轴承Maintenance-free ball bearings

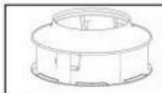	电机 **Motor**	曲线 **Curve**	额定电压 **Nominal Voltage**	额定电压范围 **Nominal Voltage Range**	电流 **Current**	转速 **Speed**	输入功率 **Max. input Power**
Type			VDC	VDC	A	RPM	W
FB3G450-48AL-20	BLDC102	Ⓐ	48	36~57	5.5	1050	265

噪音等级 **Sound Pressure Level**	风量 **Air Flow**	风压 **Air Pressure**		速度控制 **Speed Control**	接线图 **Wiring Mode**
dB(A)	m³/h	Pa	with support bracket		
63	4080	320	FK3G450-48AL-20	0-10VDC PWM Modbus485	S3

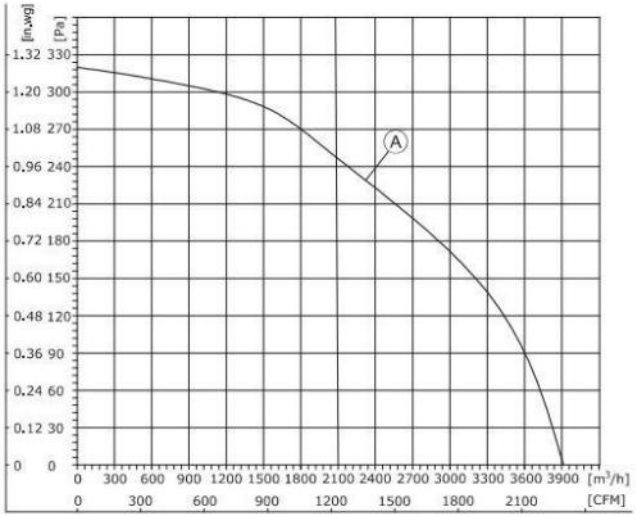

1、Air performance measured according to: ISO 5801, with DJ inlet ring without contact protection.
2、Intake-side sound level: LpA measured at 1 m distance from fan axis. The values given are only applicable under the specifi ed measuring conditions and may differ depending on the installation conditions.

DC Centrifugal Fan

(后向离心风机Centrifugal Fan)
FB3G450-48AL-20

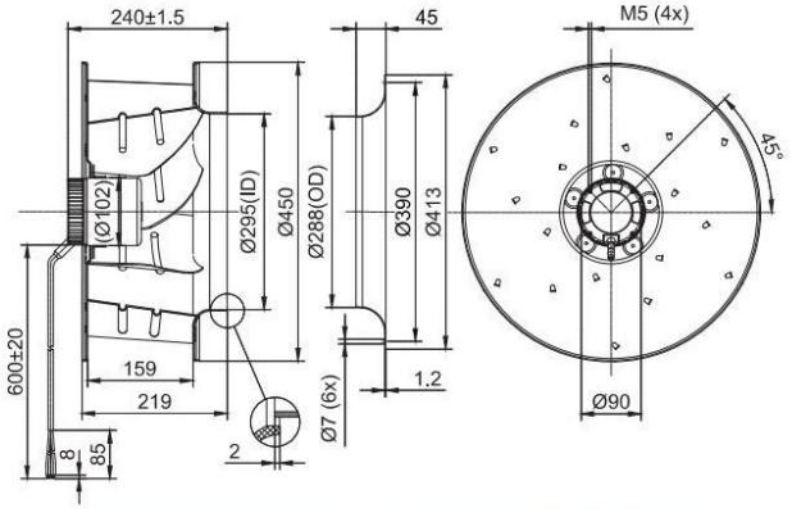

(支架离心风机Centrifugal Fan With Support Bracket)
FK3G450-48AL-20

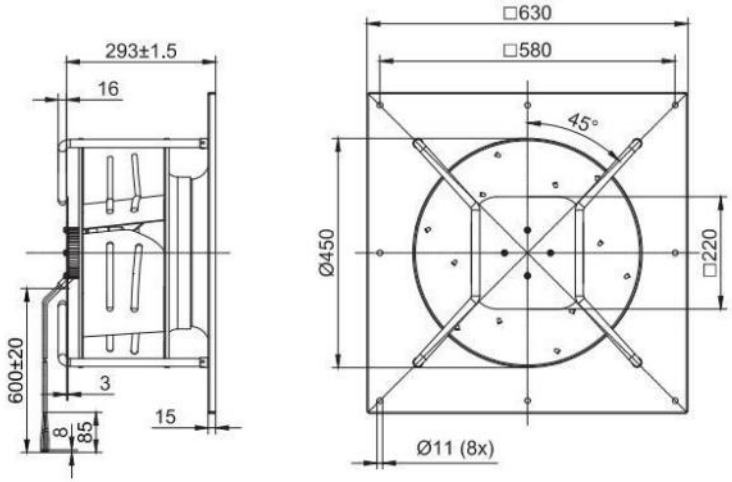

DC Axial Fans



DC Axial Fans D200

- 材料**Material:** 冷轧钢板
  风轮**Impeller:** Cold-roll steel sheets
  转子 Rotor: 电泳Electrophoresis
  端盖 Electronics housing: 压铸铝Die-cast aluminium
- 叶片数量**Number of blades:** 7
- 防护等级**Degree of protection:** IP 44
- 绝缘等级**Insulation class:** B
- 安装位置**Installation position:** 任意Any
- 模式**Mode:**连续工作制 Continuous operation (S1)

DC Axial Fans D200

- 旋转方向**Direction of rotation:** 反转，从转子方向Anti-clockwise，viewed toward rotor
- 技术特性**Technical features:** 参见附图See connection diagram
- 泄漏电流**Touch curren:** < 3,5 mA
- 能效**Efficiency:** ErP2015
- 标准/证书**Valid For Approval/Standard**：CE,RoHS,ISO9001
  环境温度**Perm. ambient temp.**：-25℃~+60℃
- 安装**Mounting:** 免维护滚珠轴承Maintenance-free ball bearings

	电机 **Motor**	曲线 **Curve**	额定电压 **Nominal Voltage**	额定电压范围 **Nominal Voltage Range**	电流 **Current**	转速 **Speed**	输入功率 **Max. input Power**	噪音等级 **Sound Pressure Level**
Type			VDC	VDC	A	RPM	W	dB(A)
FG3G200-24GN-90	BLDC92	Ⓐ	24	16~28	2.5	3000	60	62
FG3G200-48GN-90	BLDC92	Ⓐ	48	36~57	1.25	3000	60	62

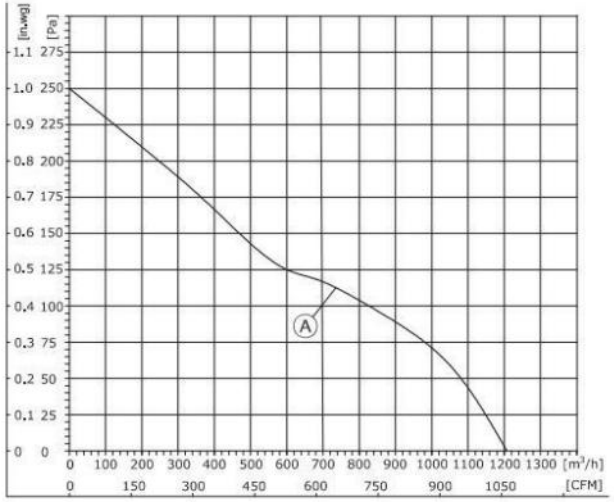

风量 **Air Flow**	风压 **Air Pressure**				速度控制 **Speed Control**	接线图 **Wiring Mode**
m³/h	Pa	with guard grille	with wall ring	with wall ring(S)		
1205	250	FG3G200-24GL-90	FW3G200-24GC-90	FW3G200-24GS-90	0-10VDC PWM RS-485	S2
1205	250	FG3G200-48GL-90	FW3G200-48GC-90	FW3G200-48GS-90		S2

1、Air performance measured according to: ISO 5801, with DJ inlet ring without contact protection.
2、Intake-side sound level: LpA measured at 1 m distance from fan axis. The values given are only applicable under the specifi ed measuring conditions and may differ depending on the installation conditions.

DC Axial Fan

(轴流风机Axial Fan)
FG3G200-24GN-90/FG3G200-48GN-90

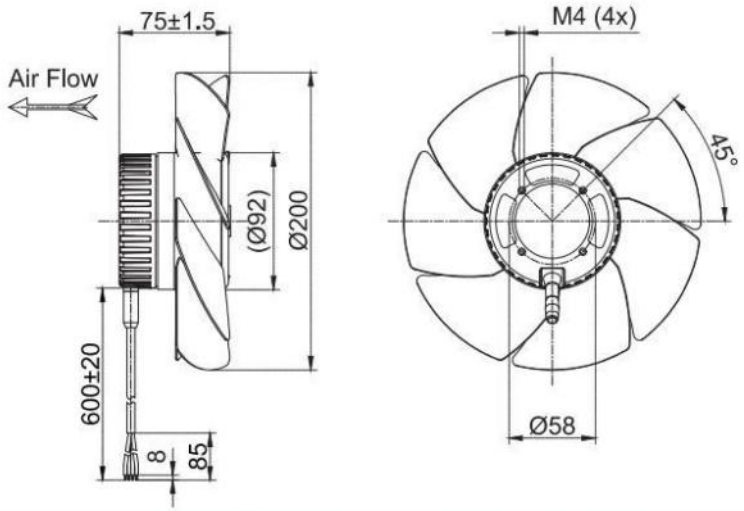

(带导风筒的轴流风机Axial Fan With Wall Ring)
FW3G200-24GC-90/FW3G200-48GC-90

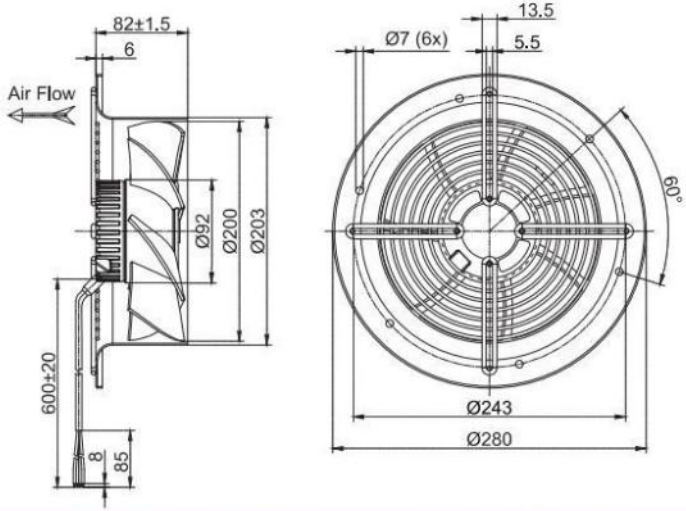

(带网罩的轴流风机Axial Fan With Guard Grille)
FG3G200-24GL-90/FG3G200-48GL-90

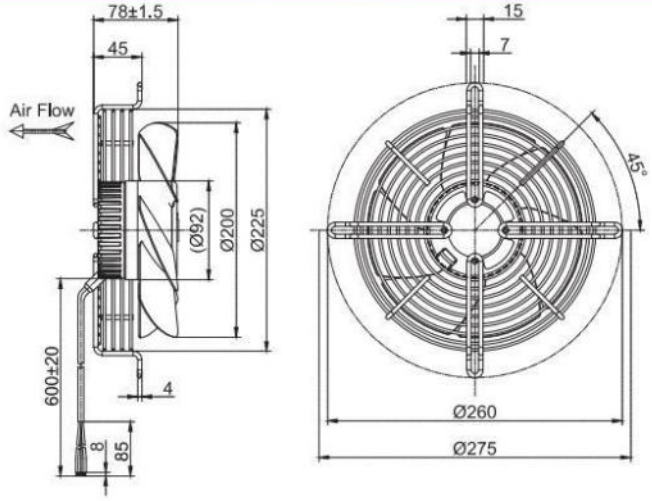

(带导风筒的轴流风机Axial Fan With Wall Ring(S))
FW3G200-24GS-90/FW3G200-48GS-90

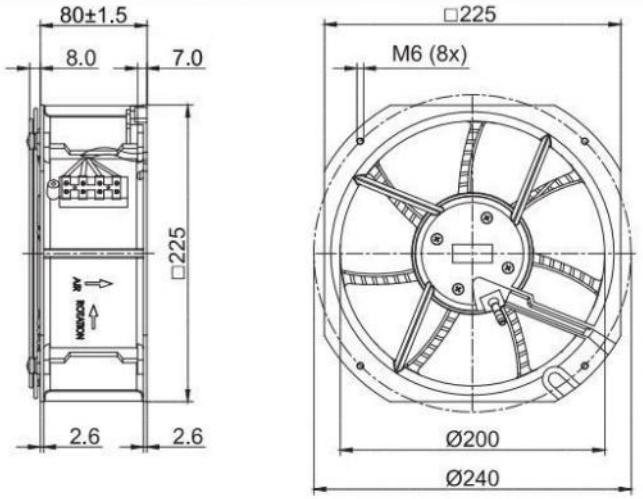



EC Axial Fans D215

- 材料**Material:** 冷轧钢板
  风轮**Impeller:** Cold-roll steel sheets
  转子 Rotor: 电泳Electrophoresis
  端盖 Electronics housing: 压铸铝Die-cast aluminium
- 叶片数量**Number of blades:** 7
- 防护等级**Degree of protection:** IP 44
- 绝缘等级**Insulation class:** B
- 安装位置**Installation position:** 任意Any
- 模式**Mode:**连续工作制 Continuous operation (S1)

	电机 **Motor**	曲线 **Curve**	额定电压 **Nominal Voltage**	额定电压范围 **Nominal Voltage Range**	电流 **Current**	转速 **Speed**	输入功率 **Max. input Power**	噪音等级 **Sound Pressure Level**
Type			VDC	VDC	A	RPM	W	dB(A)
FW3G215-24GL-90	BLDC92	Ⓐ	24	16~28	2.6	2000	62	62
FW3G215-48GL-90	BLDC92	Ⓐ	48	36~57	1.3	2000	62	62

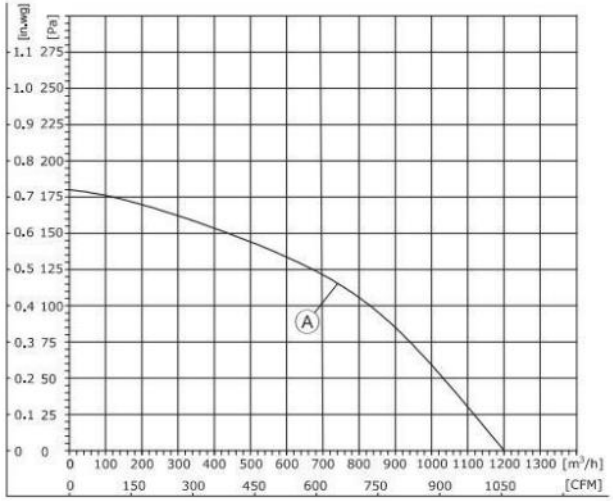

1、Air performance measured according to: ISO 5801, with DJ inlet ring without contact protection.
2、Intake-side sound level: LpA measured at 1 m distance from fan axis. The values given are only applicable under the specifi ed measuring conditions and may differ depending on the installation conditions.

EC Axial Fans D215

- 旋转方向**Direction of rotation:** 反转，从转子方向Anti-clockwise，viewed toward rotor
- 技术特性**Technical features:** 参见附图See connection diagram
- 泄漏电流**Touch curren:** < 3,5 mA
- 能效**Efficiency:** ErP2015
- 标准/证书**Valid For Approval/Standard**：CE,RoHS,ISO9001
  环境温度**Perm. ambient temp.**：-25℃~+60℃
- 安装**Mounting:** 免维护滚珠轴承Maintenance-free ball bearings

风量 **Air Flow**	风压 **Air Pressure**	速度控制 **Speed Control**	接线图 **Wiring Mode**
m³/h	Pa		
1200	180	0-10VDC PWM RS-485	S2
1200	180		S2

(带网罩的轴流风机**Axial Fan With Guard Grille**)
FW3G215-24GL-90/FW3G215-48GL-90

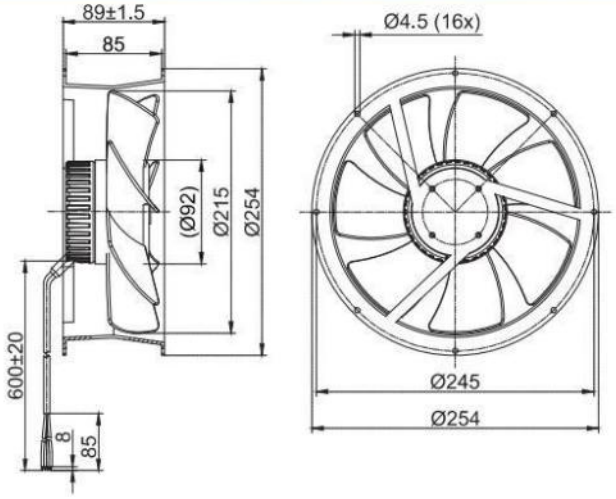

DC Axial Fans



DC Axial Fans D250

- 材料**Material:** 冷轧钢板
  风轮**Impeller:** Cold-roll steel sheets
  转子 Rotor: 电泳Electrophoresis
  端盖 Electronics housing: 压铸铝Die-cast aluminium
- 叶片数量**Number of blades:** 7
- 防护等级**Degree of protection:** IP 44
- 绝缘等级**Insulation class:** B
- 安装位置**Installation position:** 任意Any
- 模式**Mode:**连续工作制 Continuous operation (S1)

	电机 **Motor**	曲线 **Curve**	额定电压 **Nominal Voltage**	额定电压范围 **Nominal Voltage Range**	电流 **Current**	转速 **Speed**	输入功率 **Max. input Power**	噪音等级 **Sound Pressure Level**
Type			VDC	VDC	A	RPM	W	dB(A)
FG3G250-24GN-90	BLDC92	Ⓐ	24	16~28	4.4	2780	105	69
FG3G250-48GN-90	BLDC92	Ⓐ	48	36~57	2.2	2780	105	69

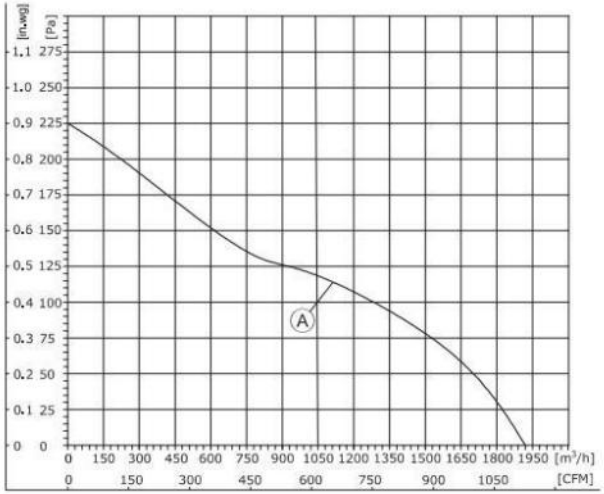

1、Air performance measured according to: ISO 5801, with DJ inlet ring without contact protection.
2、Intake-side sound level: LpA measured at 1 m distance from fan axis. The values given are only applicable under the specifi ed measuring conditions and may differ depending on the installation conditions.

DC Axial Fans D250

- 旋转方向**Direction of rotation:** 反转，从转子方向Anti-clockwise，viewed toward rotor
- 技术特性**Technical features:** 参见附图See connection diagram
- 泄漏电流**Touch curren:** < 3,5 mA
- 能效**Efficiency:** ErP2015
- 标准/证书**Valid For Approval/Standard**：CE,RoHS,ISO9001
  环境温度**Perm. ambient temp.**：-25℃~+60℃
- 安装**Mounting:** 免维护滚珠轴承Maintenance-free ball bearings

风量 **Air Flow**	风压 **Air Pressure**				速度控制 **Speed Control**	接线图 **Wiring Mode**
m³/h	Pa	with guard grille	with wall ring	with wall ring(S)		
1920	225	FG3G250-24GL-90	FW3G250-24GC-90	FW3G250-24GS-90	0-10VDC PWM RS-485	S2
1920	225	FG3G250-48GL-90	FW3G250-48GC-90	FW3G250-48GS-90		S2

(轴流风机Axial Fan)
FG3G250-24GN-90/FG3G250-48GN-90

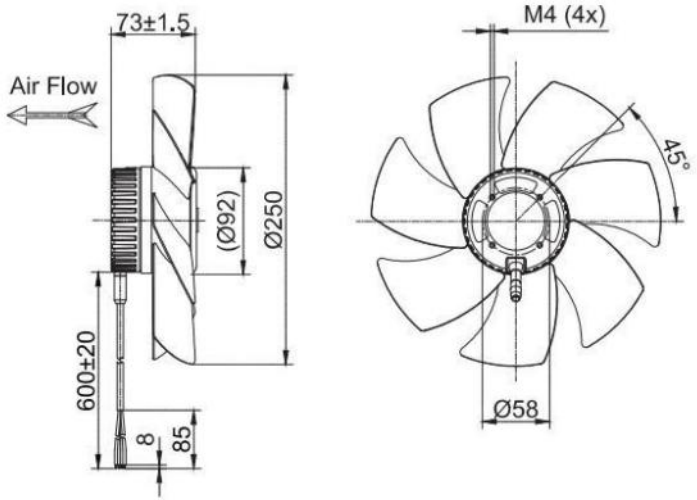

(带导风筒的轴流风机Axial Fan With Wall Ring)
FW3G250-24GC-90/FW3G250-48GC-90

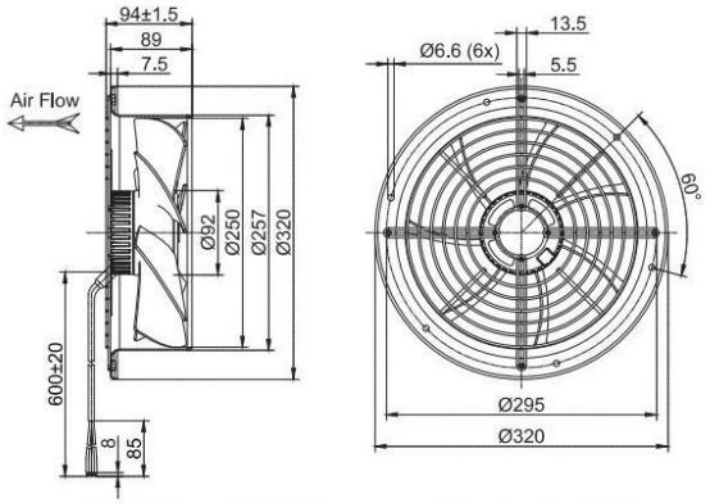

(带网罩的轴流风机Axial Fan With Guard Grille)
FG3G250-24GL-90/FG3G250-48GL-90

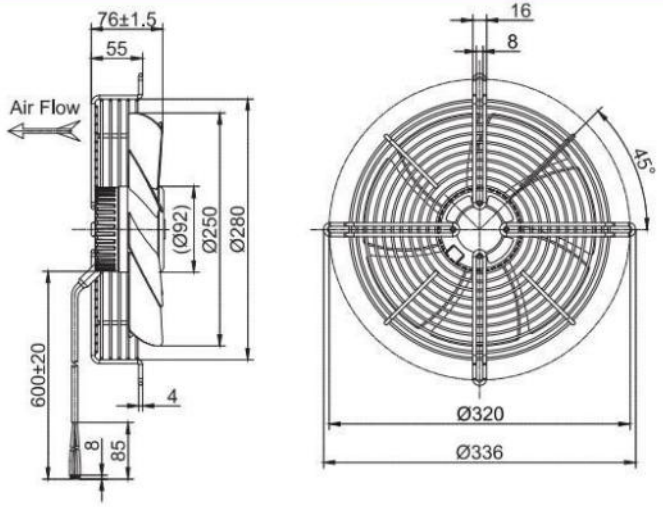

(带导风筒的轴流风机Axial Fan With Wall Ring（S）)
FW3G250-24GS-90/FW3G250-48GS-90

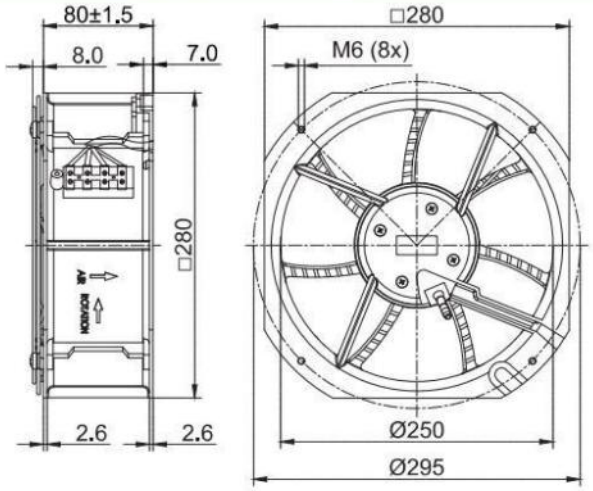

DC Axial Fans



DC Axial Fans D300

- 材料**Material:** 塑料
  风轮**Impeller:** Plastic
  转子 Rotor: 电泳Electrophoresis
  端盖 Electronics housing: 压铸铝Die-cast aluminium
- 叶片数量**Number of blades:** 5
- 防护等级**Degree of protection:** IP 44
- 绝缘等级**Insulation class:** B
- 安装位置**Installation position:** 任意Any
- 模式**Mode**:连续工作制 Continuous operation (S1)

	电机 **Motor**	曲线 **Curve**	额定电压 **Nominal Voltage**	额定电压范围 **Nominal Voltage Range**	电流 **Current**	转速 **Speed**	输入功率 **Max. input Power**	噪音等级 **Sound Pressure Level**
Type			VDC	VDC	A	RPM	W	dB(A)
FG3G300-24PN-90	BLDC92	Ⓐ	24	16~28	3.4	1800	80	66
FG3G300-48PN-90	BLDC92	Ⓐ	48	36~57	1.7	1800	80	66

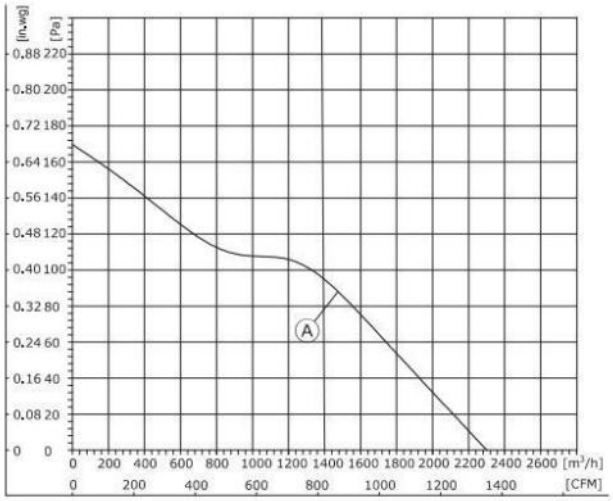

1、Air performance measured according to: ISO 5801, with DJ inlet ring without contact protection.
2、Intake-side sound level: LpA measured at 1 m distance from fan axis. The values given are only applicable under the specifi ed measuring conditions and may differ depending on the installation conditions.

DC Axial Fans D300

- 旋转方向**Direction of rotation:** 反转，从转子方向Anti-clockwise，viewed toward rotor
- 技术特性**Technical features:** 参见附图See connection diagram
- 泄漏电流**Touch curren:** < 3,5 mA
- 能效**Efficiency:** ErP2015
- 标准/证书**Valid For Approval/Standard**：CE,RoHS,ISO9001
  环境温度**Perm. ambient temp.**：-25℃~+60℃
- 安装**Mounting:** 免维护滚珠轴承Maintenance-free ball bearings

风量 **Air Flow**	风压 **Air Pressure**			速度控制 **Speed Control**	接线图 **Wiring Mode**
m³/h	Pa	with guard grille	with wall ring		
2300	170	FG3G300-24PL-90	FW3G300-24PC-90	0-10VDC PWM RS-485	S2
2300	170	FG3G300-48PL-90	FW3G300-48PC-90		S2

(轴流风机Axial Fan)
FG3G300-24PN-90/FG3G300-48PN-90

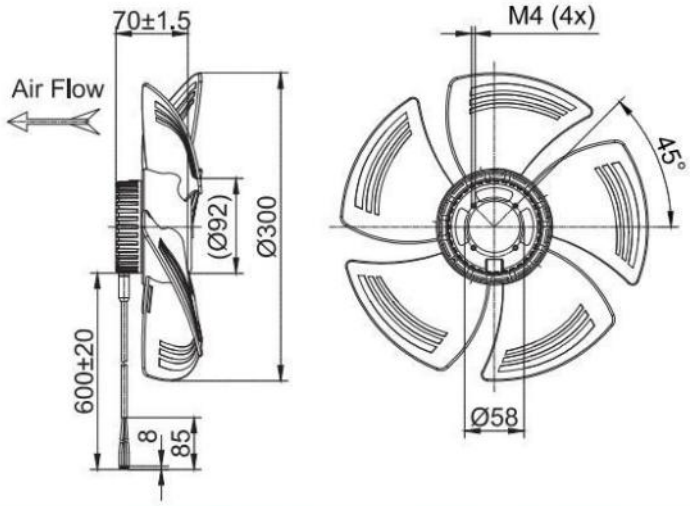

(带网罩的轴流风机Axial Fan With Guard Grille)
FG3G300-24PL-90/FG3G300-48PL-90

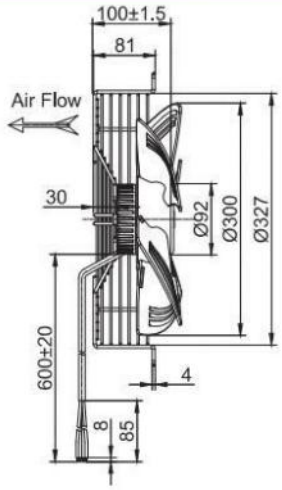

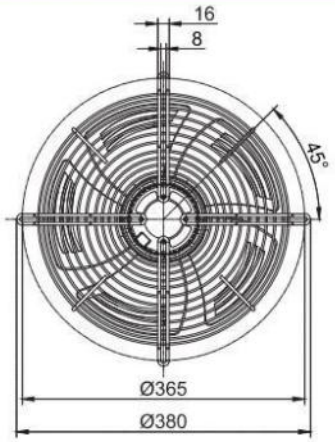



DC Axial Fans D350

- 材料**Material:** 塑料
  风轮**Impeller:** Plastic
  转子 Rotor: 电泳Electrophoresis
  端盖 Electronics housing: 压铸铝Die-cast aluminium
- 叶片数量**Number of blades:** 5
- 防护等级**Degree of protection:** IP 44
- 绝缘等级**Insulation class:** B
- 安装位置**Installation position:** 任意Any
- 模式**Mode:**连续工作制 Continuous operation (S1)

	电机 **Motor**	曲线 **Curve**	额定电压 **Nominal Voltage**	额定电压范围 **Nominal Voltage Range**	电流 **Current**	转速 **Speed**	输入功率 **Max. input Power**	噪音等级 **Sound Pressure Level**
Type			VDC	VDC	A	RPM	W	dB(A)
FG3G350-48PN-90	BLDC92	Ⓐ	48	36~57	3.4	1580	160	63
FG3G350-48PN-20	BLDC102	Ⓑ	48	36~57	8.0	1800	384	65

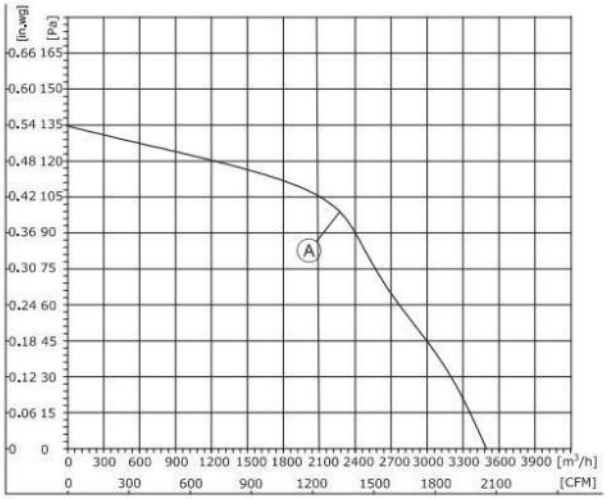

1、Air performance measured according to: ISO 5801, with DJ inlet ring without contact protection.
2、Intake-side sound level: LpA measured at 1 m distance from fan axis. The values given are only applicable under the specifi ed measuring conditions and may differ depending on the installation conditions.

DC Axial Fans D350

- 旋转方向**Direction of rotation:** 反转，从转子方向Anti-clockwise，viewed toward rotor
- 技术特性**Technical features:** 参见附图See connection diagram
- 泄漏电流**Touch curren:** < 3,5 mA
- 能效**Efficiency:** ErP2015
- 标准/证书**Valid For Approval/Standard**：CE,RoHS,ISO9001
  环境温度**Perm. ambient temp.**：-25℃~+60℃
- 安装**Mounting:** 免维护滚珠轴承Maintenance-free ball bearings

风量 **Air Flow**	风压 **Air Pressure**			速度控制 **Speed Control**	接线图 **Wiring Mode**
m³/h	Pa	with guard grille	with wall ring		
3500	135	FG3G350-48PL-90	FW3G350-48PC-90	0-10VDC PWM RS-485	S2
4000	160	FG3G350-48PL-20	FW3G350-48PC-20		S3

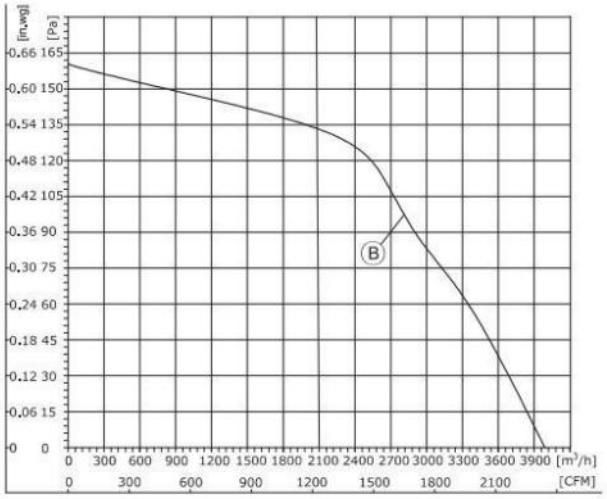

1、Air performance measured according to: ISO 5801, with DJ inlet ring without contact protection.
2、Intake-side sound level: LpA measured at 1 m distance from fan axis. The values given are only applicable under the specifi ed measuring conditions and may differ depending on the installation conditions.

(轴流风机Axial Fan)
FG3G350-48PN-90

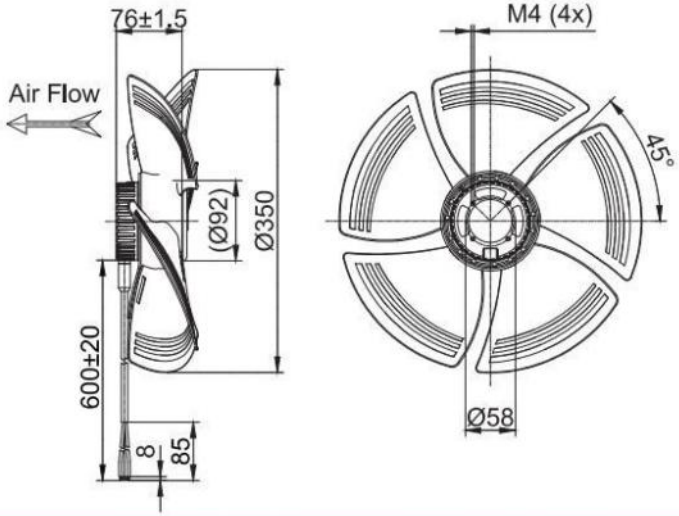

(带网罩的轴流风机Axial Fan With Guard Grille)
FG3G350-48PL-90

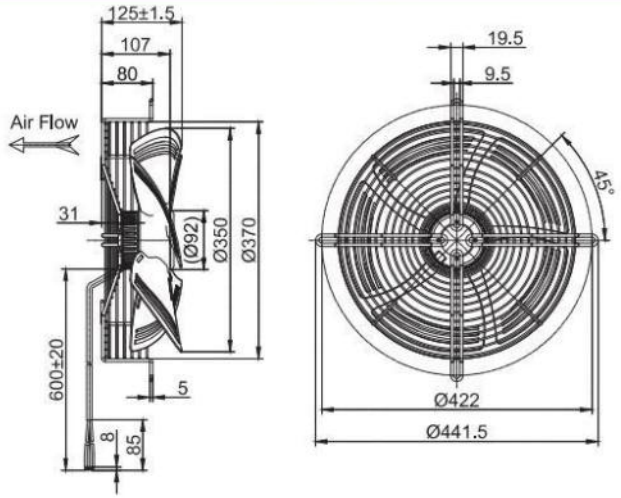

(带导风筒的轴流风机Axial Fan With Wall Ring)
FW3G350-48PC-90

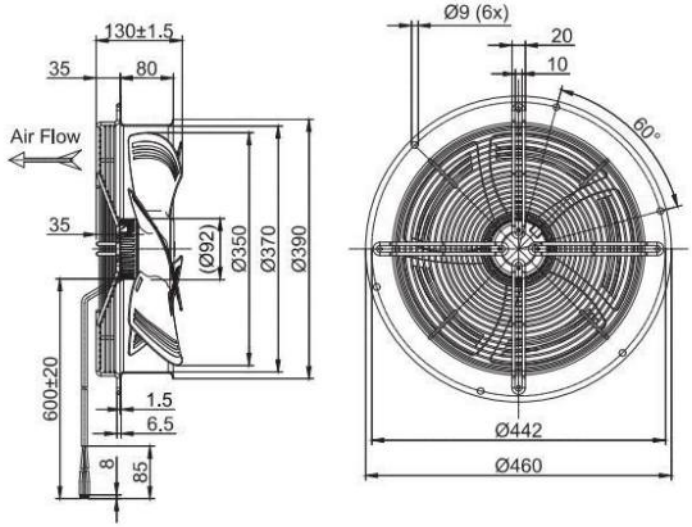

(轴流风机Axial Fan)
FG3G350-48PN-20

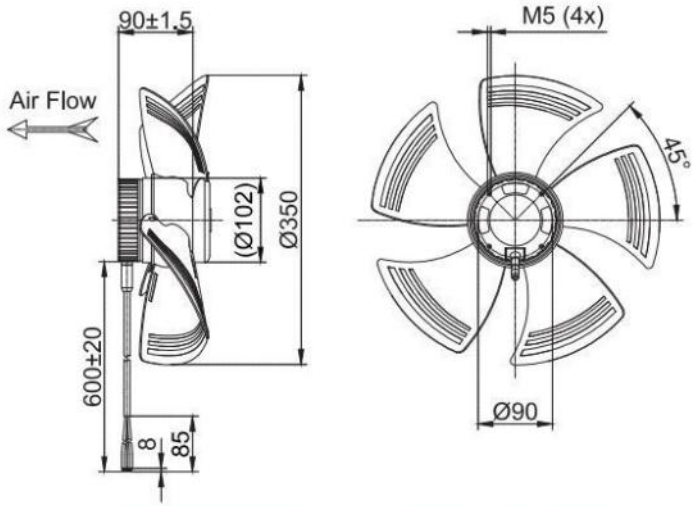

(带网罩的轴流风机Axial Fan With Guard Grille)
FG3G350-48PL-20

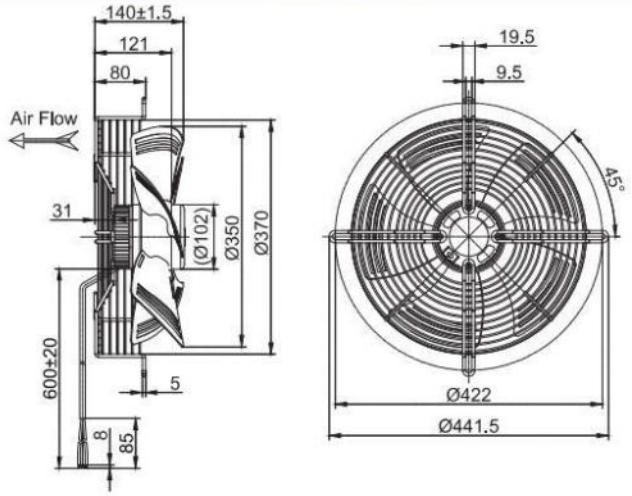

(带导风筒的轴流风机Axial Fan With Wall Ring)
FW3G350-48PC-20

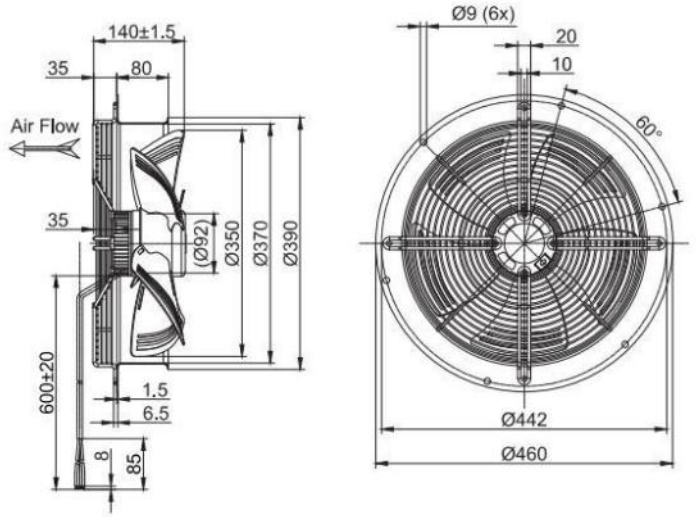



DC Axial Fans D400

- 材料**Material:** 塑料
  风轮**Impeller:** Plastic
  转子 Rotor: 电泳Electrophoresis
  端盖 Electronics housing: 压铸铝Die-cast aluminium
- 叶片数量**Number of blades:** 5
- 防护等级**Degree of protection:** IP 44
- 绝缘等级**Insulation class:** B
- 安装位置**Installation position:** 任意Any
- 模式**Mode:**连续工作制 Continuous operation (S1)

	电机 **Motor**	曲线 **Curve**	额定电压 **Nominal Voltage**	额定电压范围 **Nominal Voltage Range**	电流 **Current**	转速 **Speed**	输入功率 **Max. input Power**	噪音等级 **Sound Pressure Level**
Type			VDC	VDC	A	RPM	W	dB(A)
FG3G400-48PN-20	BLDC102	Ⓐ	48	36~57	5.7	1400	274	68
FG3G400-110PN-21	BLDC102	Ⓑ	110	77~138	3.6	1600	400	73

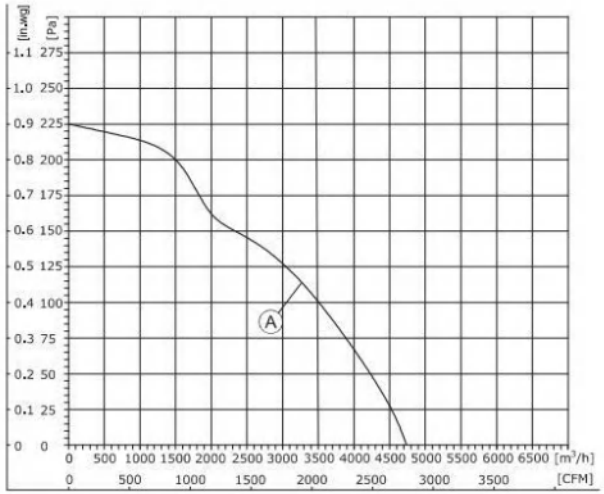

1、Air performance measured according to: ISO 5801, with DJ inlet ring without contact protection.
2、Intake-side sound level: LpA measured at 1 m distance from fan axis. The values given are only applicable under the specifi ed measuring conditions and may differ depending on the installation conditions.

DC Axial Fans D400

- 旋转方向**Direction of rotation:** 反转，从转子方向Anti-clockwise，viewed toward rotor
- 技术特性**Technical features:** 参见附图See connection diagram
- 泄漏电流**Touch curren:** < 3,5 mA
- 能效**Efficiency:** ErP2015
- 标准/证书**Valid For Approval/Standard**：CE,RoHS,ISO9001
  环境温度**Perm. ambient temp.**：-25℃~+60℃
- 安装**Mounting:** 免维护滚珠轴承Maintenance-free ball bearings

风量 **Air Flow**	风压 **Air Pressure**			速度控制 **Speed Control**	接线图 **Wiring Mode**
m³/h	Pa	with guard grille	with wall ring		
4730	225	FG3G400-48PL-20	FW3G400-48PF-20	0-10VDC PWM RS-485	S3
5500	290	FG3G400-110PL-21	FW3G400-110PF-21		S3

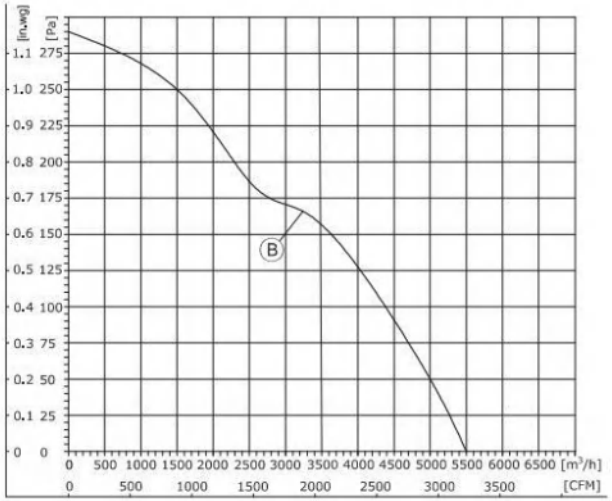

1、Air performance measured according to: ISO 5801, with DJ inlet ring without contact protection.
2、Intake-side sound level: LpA measured at 1 m distance from fan axis. The values given are only applicable under the specifi ed measuring conditions and may differ depending on the installation conditions.

(轴流风机Axial Fan)
FG3G400-48PN-20/FG3G400-110PN-21

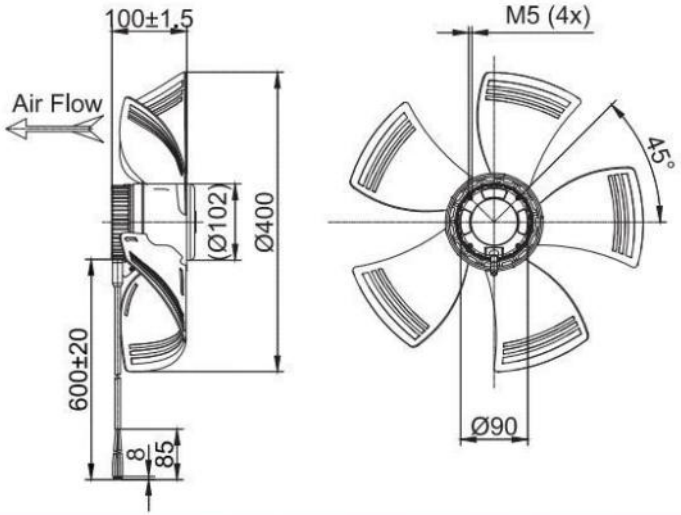

(带网罩的轴流风机Axial Fan With Guard Grille)
FG3G400-48PL-20/FG3G400-110PL-21

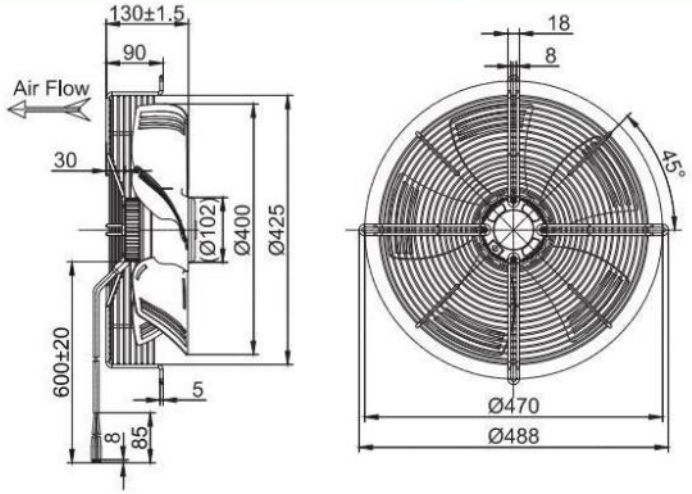

(带导风筒的轴流风机Axial Fan With Wall Ring)
FW3G400-48PF-20/FW3G400-110PF-21

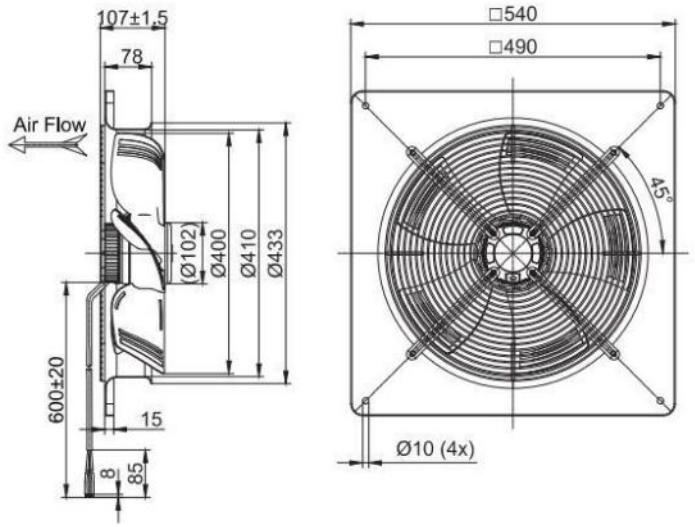



DC Axial Fans D450

- 材料**Material:** 塑料
  风轮**Impeller:** Plastic
  转子 Rotor: 电泳Electrophoresis
  端盖 Electronics housing: 压铸铝Die-cast aluminium
- 叶片数量**Number of blades:** 5
- 防护等级**Degree of protection:** IP 44
- 绝缘等级**Insulation class:** B
- 安装位置**Installation position:** 任意Any
- 模式**Mode:**连续工作制 Continuous operation (S1)

	电机 **Motor**	曲线 **Curve**	额定电压 **Nominal Voltage**	额定电压范围 **Nominal Voltage Range**	电流 **Current**	转速 **Speed**	输入功率 **Max. input Power**	噪音等级 **Sound Pressure Level**
Type			VDC	VDC	A	RPM	W	dB(A)
FG3G450-48PN-20	BLDC102	Ⓐ	48	36~57	5.4	1450	260	63
FG3G450-110PN-20	BLDC102	Ⓑ	110	77~138	3.9	1600	420	68

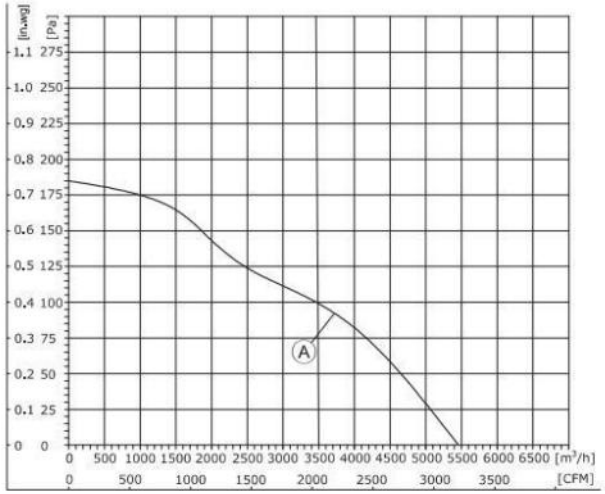

1、Air performance measured according to: ISO 5801, with DJ inlet ring without contact protection.
2、Intake-side sound level: LpA measured at 1 m distance from fan axis. The values given are only applicable under the specifi ed measuring conditions and may differ depending on the installation conditions.

DC Axial Fans D450

- 旋转方向**Direction of rotation:** 反转，从转子方向Anti-clockwise，viewed toward rotor
- 技术特性**Technical features:** 参见附图See connection diagram
- 泄漏电流**Touch curren:** < 3,5 mA
- 能效**Efficiency:** ErP2015
- 标准/证书**Valid For Approval/Standard**：CE,RoHS,ISO9001
  环境温度**Perm. ambient temp.**：-25℃~+60℃
- 安装**Mounting:** 免维护滚珠轴承Maintenance-free ball bearings

风量 **Air Flow**	风压 **Air Pressure**			速度控制 **Speed Control**	接线图 **Wiring Mode**
m³/h	Pa	with guard grille	with wall ring		
5450	185	FG3G450-48PL-20	FW3G450-48PF-20	0-10VDC PWM RS-485	S3
6150	250	FG3G450-110PL-20	FW3G450-110PF-20		S3

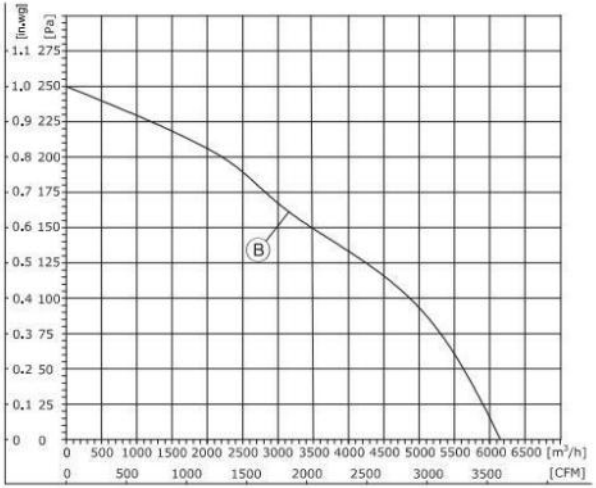

1、Air performance measured according to: ISO 5801, with DJ inlet ring without contact protection.
2、Intake-side sound level: LpA measured at 1 m distance from fan axis. The values given are only applicable under the specifi ed measuring conditions and may differ depending on the installation conditions.

(轴流风机Axial Fan)
FG3G450-48PN-20/FG3G450-110PN-20

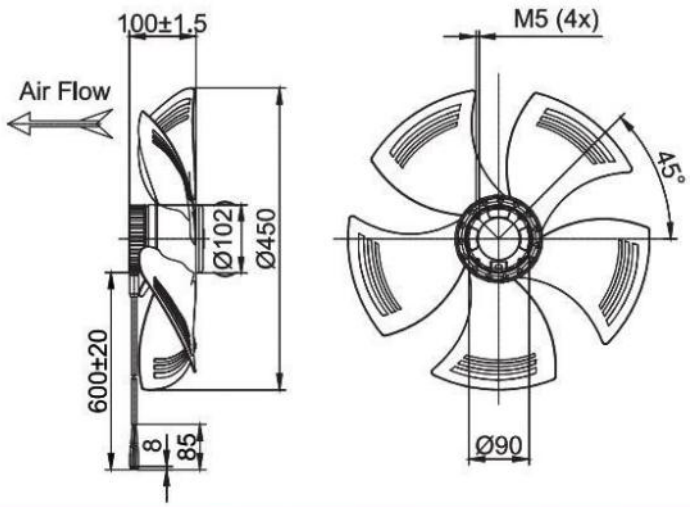

(带网罩的轴流风机Axial Fan With Guard Grille)
FG3G450-48PL-20/FG3G450-110PL-20

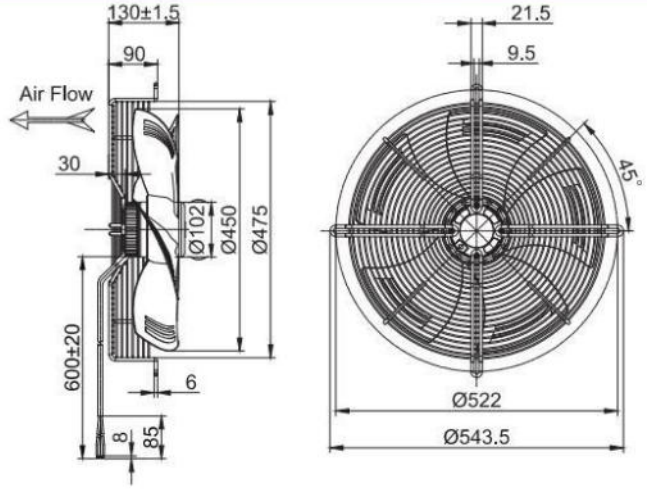

(带导风筒的轴流风机Axial Fan With Wall Ring)
FW3G450-48PF-20/FW3G450-110PF-20

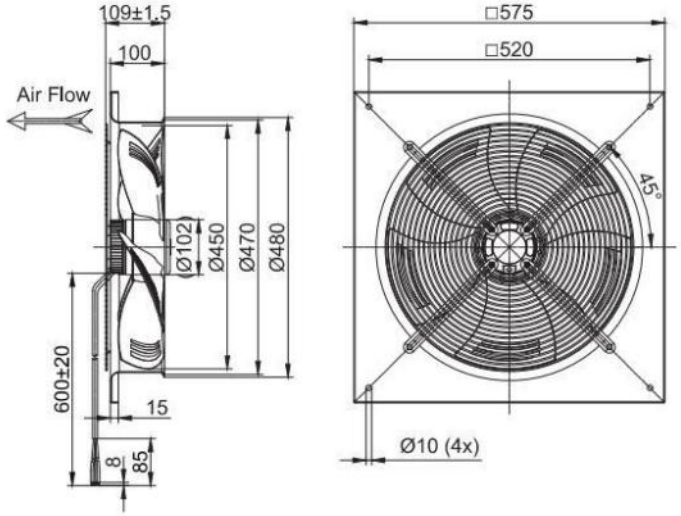



DC Single Inlet Centrifugal Blower D097

- 材料**Material:** 镀锌钢板
  风轮**Impeller:** Galvanized steel plate
  转子 Rotor: 电泳Electrophoresis
  端盖 Electronics housing: 压铸铝Die-cast aluminium
- 叶片数量**Number of blades:** 34
- 防护等级**Degree of protection:** IP 44
- 绝缘等级**Insulation class:** B
- 安装位置**Installation position:** 任意Any
- 模式**Mode:**连续工作制 Continuous operation (S1)

DC Single Inlet Centrifugal Blower D097

- 旋转方向**Direction of rotation:** 正转，从转子方向Clockwise，viewed toward rotor
- 技术特性**Technical features:** 参见附图See connection diagram
- 泄漏电流**Touch curren:** < 3,5 mA
- 能效**Efficiency:** ErP2015
- 标准/证书**Valid For Approval/Standard:** CE,RoHS,ISO9001
  环境温度**Perm. ambient temp.:** -25℃~+60℃
- 安装**Mounting:** 免维护滚珠轴承Maintenance-free ball bearings

	电机 **Motor**	曲线 **Curve**	额定电压 **Nominal Voltage**	额定电压范围 **Nominal Voltage Range**	电流 **Current**	转速 **Speed**	输入功率 **Max. input Power**
Type			VDC	VDC	A	RPM	W
FF3G097-24GL-50	BLDC53	Ⓐ	24	16~28	1.6	2500	38.4
FF3G097-48GL-50	BLDC53	Ⓐ	48	36~57	0.8	2500	38.4

噪音等级 **Sound Pressure Level**	风量 **Air Flow**	风压 **Air Pressure**	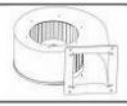	速度控制 **Speed Control**	接线图 **Wiring Mode**
dB(A)	m³/h	Pa	with scroll housing		
62	150	400	FS3G097-24GL-50	0-10VDC PWM	S1
62	150	400	FS3G097-48GL-50		S1

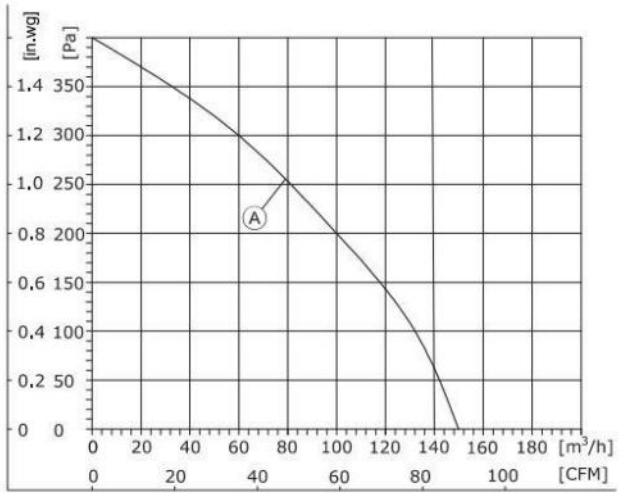

1、Air performance measured according to: ISO 5801, with DJ inlet ring without contact protection.
2、Intake-side sound level: LpA measured at 1 m distance from fan axis. The values given are only applicable under the specifi ed measuring conditions and may differ depending on the installation conditions.

DC Blowers

(前向离心风机Forward Centrifugal Blower Without Scroll Housing)
FF3G097-24GL-50/FF3G097-48GL-50

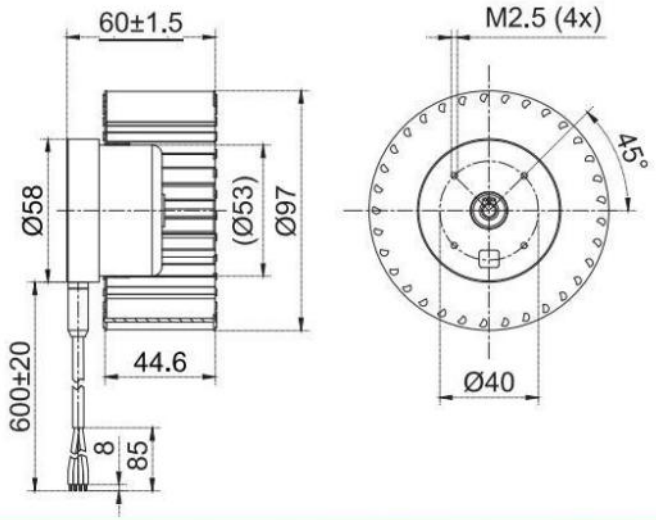

(单进风鼓风机Single Inlet Centrifugal Blower With Scroll Housing)
FS3G097-24GL-50/FS3G097-48GL-50

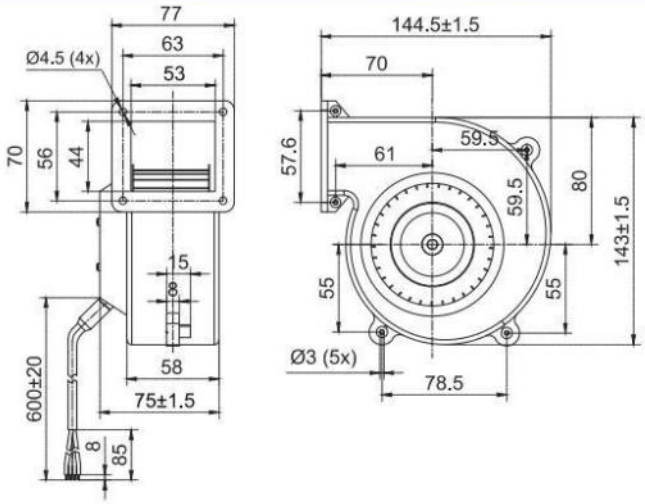

DC Blowers

EC Centrifugal Blowers



DC Single Inlet Centrifugal Blower D108

- 材料**Material:** 镀锌钢板
  风轮**Impeller:** Galvanized steel plate
  转子 Rotor: 电泳Electrophoresis
  端盖 Electronics housing: 压铸铝Die-cast aluminium
- 叶片数量**Number of blades:** 34
- 防护等级**Degree of protection:** IP 44
- 绝缘等级**Insulation class:** B
- 安装位置**Installation position:** 任意Any
- 模式**Mode:**连续工作制 Continuous operation (S1)

	电机 **Motor**	曲线 **Curve**	额定电压 **Nominal Voltage**	额定电压范围 **Nominal Voltage Range**	电流 **Current**	转速 **Speed**	输入功率 **Max. input Power**
Type			VDC	VDC	A	RPM	W
FF3G108-24GL-70	BLDC72	Ⓐ	24	16~28	2.1	2800	50
FF3G108-48GL-70	BLDC72	Ⓐ	48	36~57	1.05	2800	50

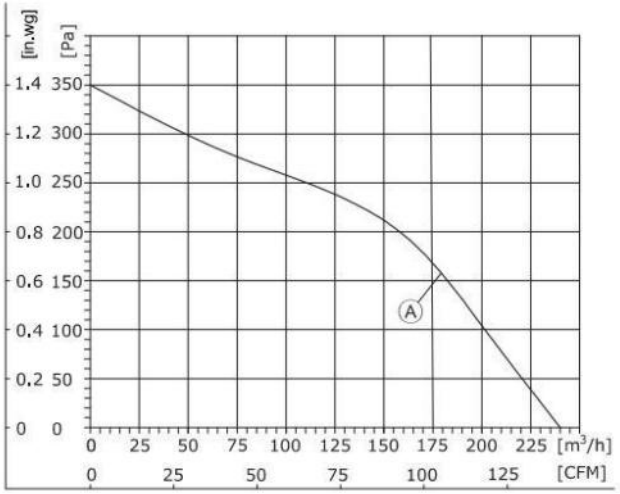

1、Air performance measured according to: ISO 5801, with DJ inlet ring without contact protection.
2、Intake-side sound level: LpA measured at 1 m distance from fan axis. The values given are only applicable under the specifi ed measuring conditions and may differ depending on the installation conditions.

DC Single Inlet Centrifugal Blower D108

- 旋转方向**Direction of rotation:** 正转，从转子方向Clockwise，viewed toward rotor
- 技术特性**Technical features:** 参见附图See connection diagram
- 泄漏电流**Touch curren:** < 3,5 mA
- 能效**Efficiency:** ErP2015
- 标准/证书**Valid For Approval/Standard:** CE,RoHS,ISO9001
  环境温度**Perm. ambient temp.:** -25℃~+60℃
- 安装**Mounting:** 免维护滚珠轴承Maintenance-free ball bearings

噪音等级 **Sound Pressure Level**	风量 **Air Flow**	风压 **Air Pressure**	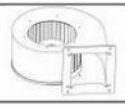	速度控制 **Speed Control**	接线图 **Wiring Mode**
dB(A)	m³/h	Pa	with scroll housing		
64	240	350	FS3G108-24GL-70	0-10VDC PWM	S1
64	240	350	FS3G108-48GL-70		S1

(前向离心风机Forward Centrifugal Blower Without Scroll Housing)
FF3G108-24GL-70/FF3G108-48GL-70

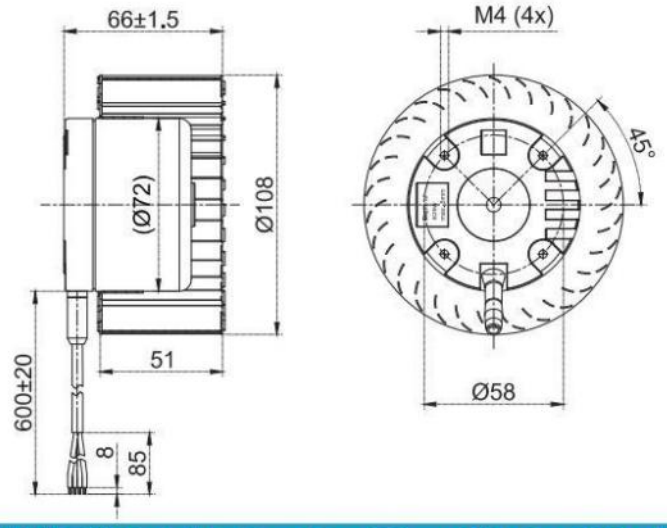

(单进风鼓风机Single Inlet Centrifugal Blower With Scroll Housing)
FS3G108-24GL-70/FS3G108-48GL-70

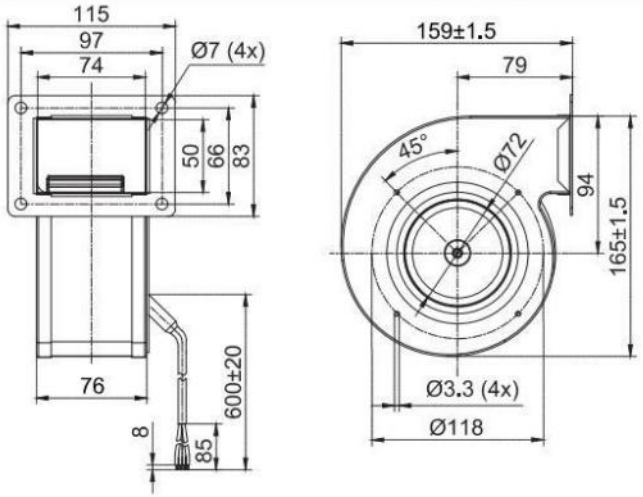

DC Blowers



DC Single Inlet Centrifugal Blower D120

- 材料**Material:** 镀锌钢板
  风轮**Impeller:** Galvanized steel plate
  转子 Rotor: 电泳Electrophoresis
  端盖 Electronics housing: 压铸铝Die-cast aluminium
- 叶片数量**Number of blades:** 34
- 防护等级**Degree of protection:** IP 44
- 绝缘等级**Insulation class:** B
- 安装位置**Installation position:** 任意Any
- 模式**Mode:**连续工作制 Continuous operation (S1)

	电机 **Motor**	曲线 **Curve**	额定电压 **Nominal Voltage**	额定电压范围 **Nominal Voltage Range**	电流 **Current**	转速 **Speed**	输入功率 **Max. input Power**
Type			VDC	VDC	A	RPM	W
FF3G120-24GL-70	BLDC72	Ⓐ	24	16~28	2.8	2580	67
FF3G120-48GL-70	BLDC72	Ⓐ	48	36~57	1.4	2580	67

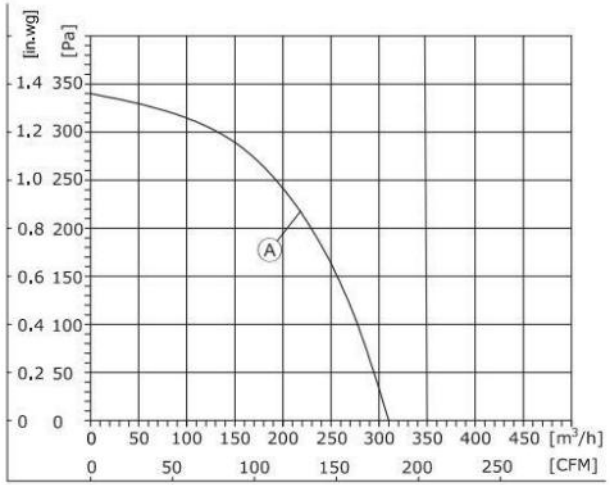

1、Air performance measured according to: ISO 5801, with DJ inlet ring without contact protection.
2、Intake-side sound level: LpA measured at 1 m distance from fan axis. The values given are only applicable under the specifi ed measuring conditions and may differ depending on the installation conditions.

DC Single Inlet Centrifugal Blower D120

- 旋转方向**Direction of rotation:** 正转，从转子方向Clockwise，viewed toward rotor
- 技术特性**Technical features:** 参见附图See connection diagram
- 泄漏电流**Touch curren:** < 3,5 mA
- 能效**Efficiency:** ErP2015
- 标准/证书**Valid For Approval/Standard:** CE,RoHS,ISO9001
  环境温度**Perm. ambient temp.:** -25℃~+60℃
- 安装**Mounting:** 免维护滚珠轴承Maintenance-free ball bearings

噪音等级 **Sound Pressure Level**	风量 **Air Flow**	风压 **Air Pressure**	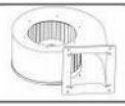	速度控制 **Speed Control**	接线图 **Wiring Mode**
dB(A)	m³/h	Pa	with scroll housing		
65	310	340	FS3G120-24GL-70	0-10VDC PWM	S1
65	310	340	FS3G120-48GL-70		S1

(前向离心风机Forward Centrifugal Blower Without Scroll Housing)
FF3G120-24GL-70/FF3G120-48GL-70

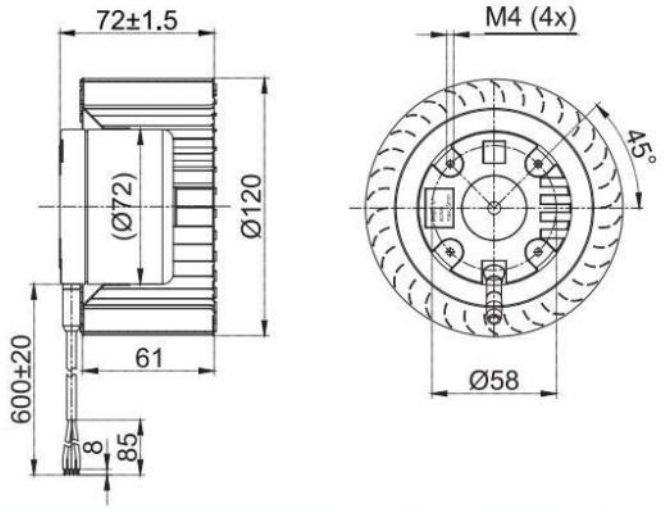

(单进风鼓风机Single Inlet Centrifugal Blower With Scroll Housing)
FS3G120-24GL-70/FS3G120-48GL-70

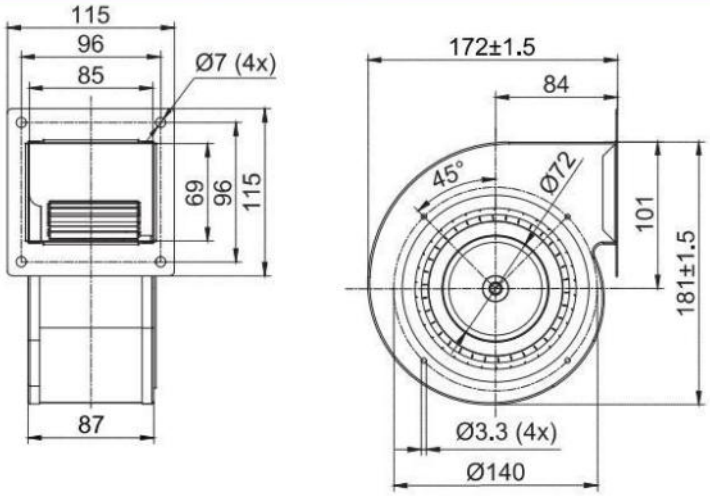

DC Blowers



DC Single Inlet Centrifugal Blower D133

- 材料**Material:** 镀锌钢板
  风轮**Impeller:** Galvanized steel plate
  转子 Rotor: 电泳Electrophoresis
  端盖 Electronics housing: 压铸铝Die-cast aluminium
- 叶片数量**Number of blades:** 38
- 防护等级**Degree of protection:** IP 44
- 绝缘等级**Insulation class:** B
- 安装位置**Installation position:** 任意Any
- 模式**Mode:**连续工作制 Continuous operation (S1)

DC Single Inlet Centrifugal Blower D133

- 旋转方向**Direction of rotation:** 正转，从转子方向Clockwise，viewed toward rotor
- 技术特性**Technical features:** 参见附图See connection diagram
- 泄漏电流**Touch curren:** < 3,5 mA
- 能效**Efficiency:** ErP2015
- 标准/证书**Valid For Approval/Standard:** CE,RoHS,ISO9001
  环境温度**Perm. ambient temp.:** -25℃~+60℃
- 安装**Mounting:** 免维护滚珠轴承Maintenance-free ball bearings

	电机 Motor	曲线 Curve	额定电压 Nominal Voltage	额定电压范围 Nominal Voltage Range	电流 Current	转速 Speed	输入功率 Max. input Power
Type			VDC	VDC	A	RPM	W
FF3G133-24GL-70	BLDC72	Ⓐ	24	16~28	2.4	2000	58
FF3G133-48GL-70	BLDC72	Ⓐ	48	36~57	1.2	2000	58

噪音等级 Sound Pressure Level	风量 Air Flow	风压 Air Pressure	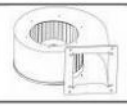	速度控制 Speed Control	接线图 Wiring Mode
dB(A)	m³/h	Pa	with scroll housing		
64	220	310	FS3G133-24GL-70	0-10VDC PWM	S1
64	220	310	FS3G133-48GL-70		S1

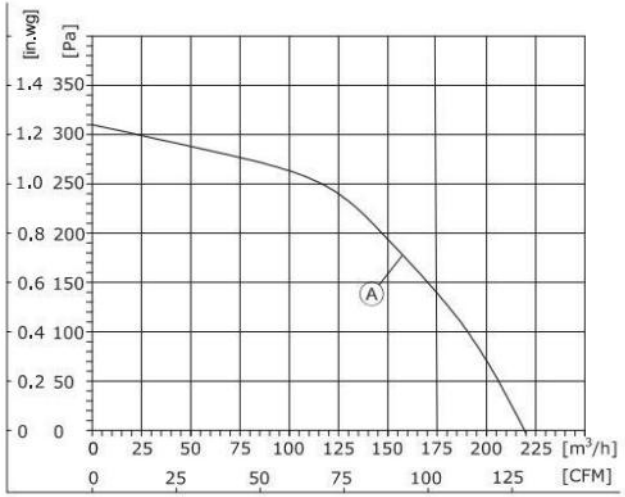

1、Air performance measured according to: ISO 5801, with DJ inlet ring without contact protection.
2、Intake-side sound level: LpA measured at 1 m distance from fan axis. The values given are only applicable under the specifi ed measuring conditions and may differ depending on the installation conditions.

DC Blowers

(前向离心风机Forward Centrifugal Blower Without Scroll Housing)
FF3G133-24GL-70/FF3G133-48GL-70

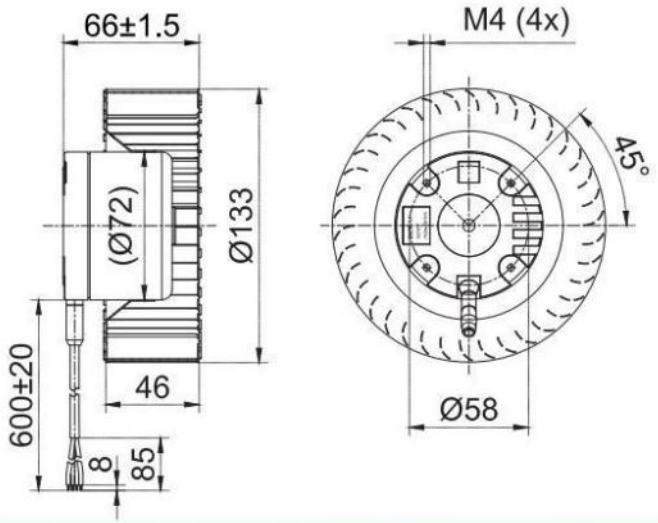

(单进风鼓风机Single Inlet Centrifugal Blower With Scroll Housing)
FS3G133-24GL-70/FS3G133-48GL-70

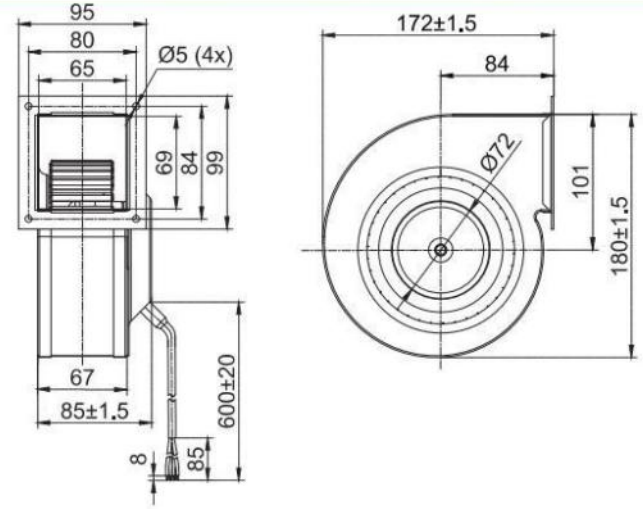

DC Centrifugal Blowers

DC Single Inlet Centrifugal Blower



– 动料**Material:** 镀锌钢板
风轮**Impeller:** Galvanized steel plate
转子 Rotor: 电泳Electrophoresis
端盖 Electronics housing: 压铸铝Die-cast aluminium
– 叶片数量**Number of blades:** 38
– 防护等级**Degree of protection:** IP 44
– 绝缘等级**Insulation class:** B
– 安装位置**Installation position:** 任意Any
– 模式**Mode:**连续工作制 Continuous operation (S1)

	电机 **Motor**	曲线 **Curve**	额定电压 **Nominal Voltage**	额定电压范围 **Nominal Voltage Range**	电流 **Current**	转速 **Speed**	输入功率 **Max. input Power**
Type			VDC	VDC	A	RPM	W
FF3G140-24GL-90	BLDC92	Ⓐ	24	16~28	6.25	2560	150
FF3G140-48GL-90	BLDC92	Ⓐ	48	36~57	3.1	2560	150

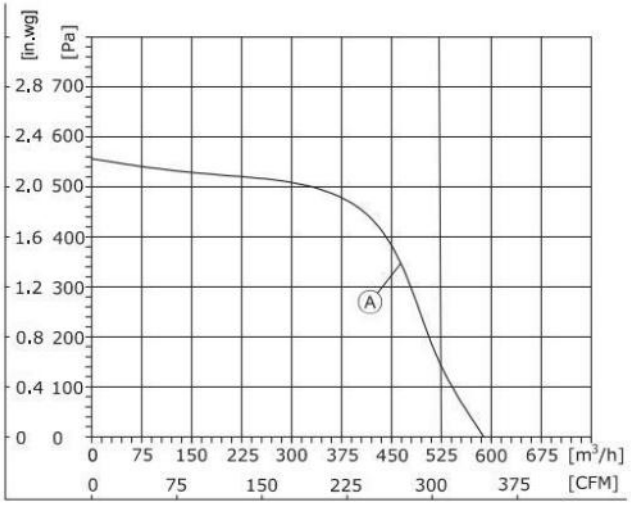

1、Air performance measured according to: ISO 5801, with DJ inlet ring without contact protection.
2、Intake-side sound level: LpA measured at 1 m distance from fan axis. The values given are only applicable under the specifi ed measuring conditions and may differ depending on the installation conditions.

DC Single Inlet Centrifugal Blower D140

– 旋转方向**Direction of rotation:** 正转，从转子方向Clockwise，viewed toward rotor
– 技术特性**Technical features:** 参见附图See connection diagram
– 泄漏电流**Touch curren:** < 3,5 mA
– 能效**Efficiency:** ErP2015
– 标准/证书**Valid For Approval/Standard:** CE,RoHS,ISO9001
环境温度**Perm. ambient temp.:** -25℃~+60℃
– 安装**Mounting:** 免维护滚珠轴承Maintenance-free ball bearings

噪音等级 **Sound Pressure Level**	风量 **Air Flow**	风压 **Air Pressure**	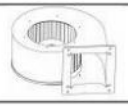	速度控制 **Speed Control**	接线图 **Wiring Mode**
dB(A)	m³/h	Pa	with scroll housing		
70	590	554	FS3G097-24GL-50	0-10VDC PWM RS-485	S2
70	590	554	FS3G097-48GL-50		S2

(前向离心风机Forward Centrifugal Blower Without Scroll Housing)
FF3G140-24GL-90/FF3G140-48GL-90

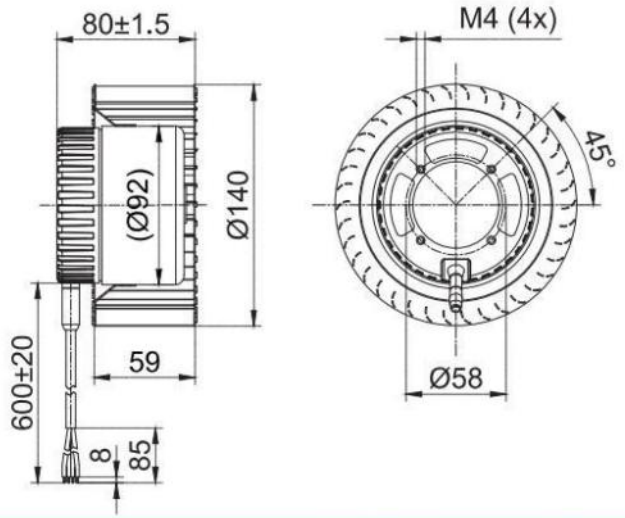

(单进风鼓风机Single Inlet Centrifugal Blower With Scroll Housing)
FS3G140-24GL-90/FS3G140-48GL-90

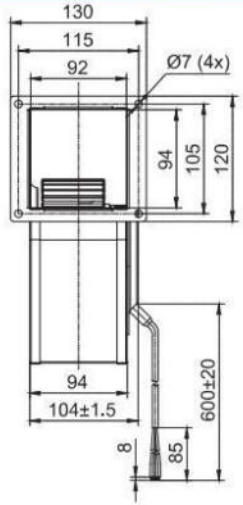

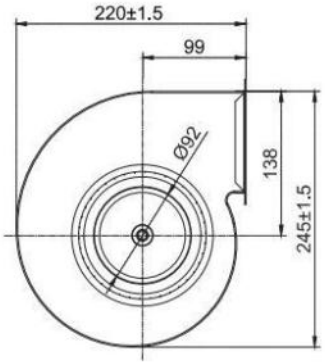

DC Centrifugal Blowers



DC Single Inlet Centrifugal Blower D160

- 材料**Material:** 镀锌钢板
  风轮**Impeller:** Galvanized steel plate
  转子 Rotor: 电泳Electrophoresis
  端盖 Electronics housing: 压铸铝Die-cast aluminium
- 叶片数量**Number of blades:** 34
- 防护等级**Degree of protection:** IP 44
- 绝缘等级**Insulation class:** B
- 安装位置**Installation position:** 任意Any
- 模式**Mode:**连续工作制 Continuous operation (S1)

DC Single Inlet Centrifugal Blower D160

- 旋转方向**Direction of rotation:** 正转，从转子方向Clockwise，viewed toward rotor
- 技术特性**Technical features:** 参见附图See connection diagram
- 泄漏电流**Touch curren:** < 3,5 mA
- 能效**Efficiency:** ErP2015
- 标准/证书**Valid For Approval/Standard:** CE,RoHS,ISO9001
  环境温度**Perm. ambient temp.:** -25℃~+60℃
- 安装**Mounting:** 免维护滚珠轴承Maintenance-free ball bearings

	电机 Motor	曲线 Curve	额定电压 Nominal Voltage	额定电压范围 Nominal Voltage Range	电流 Current	转速 Speed	输入功率 Max. input Power
Type			VDC	VDC	A	RPM	W
FF3G160-24GL-90	BLDC92	Ⓐ	24	16~28	6.25	2050	150
FF3G160-48GL-90	BLDC92	Ⓐ	48	36~57	3.1	2050	150

噪音等级 Sound Pressure Level	风量 Air Flow	风压 Air Pressure	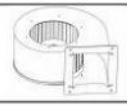	速度控制 Speed Control	接线图 Wiring Mode
dB(A)	m³/h	Pa	with scroll housing		
71	630	620	FS3G160-24GL-90	0-10VDC PWM RS-485	S2
71	630	620	FS3G160-48GL-90		S2

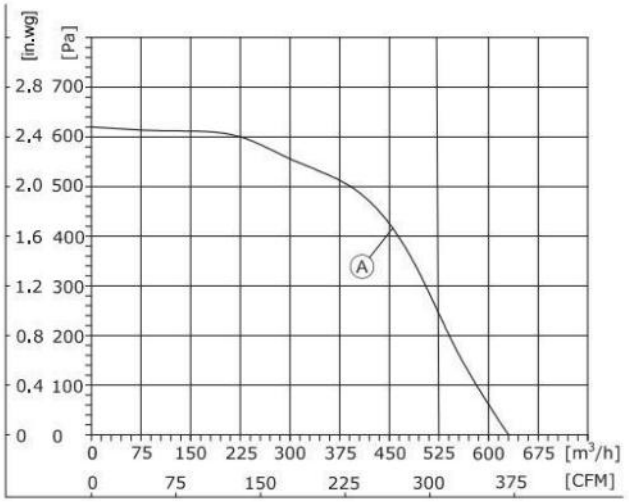

1、Air performance measured according to: ISO 5801, with DJ inlet ring without contact protection.
2、Intake-side sound level: LpA measured at 1 m distance from fan axis. The values given are only applicable under the specifi ed measuring conditions and may differ depending on the installation conditions.

DC Blowers

(前向离心风机Forward Centrifugal Blower Without Scroll Housing)
FF3G160-24GL-90/FF3G160-48GL-90

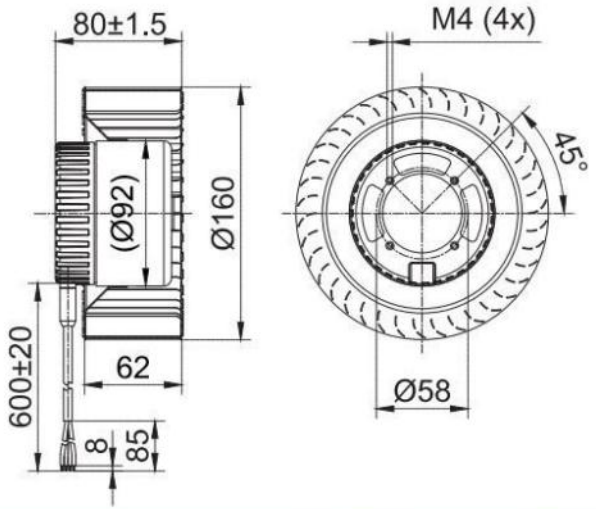

(单进风鼓风机Single Inlet Centrifugal Blower With Scroll Housing)
FS3G160-24GL-90/FS3G160-48GL-90

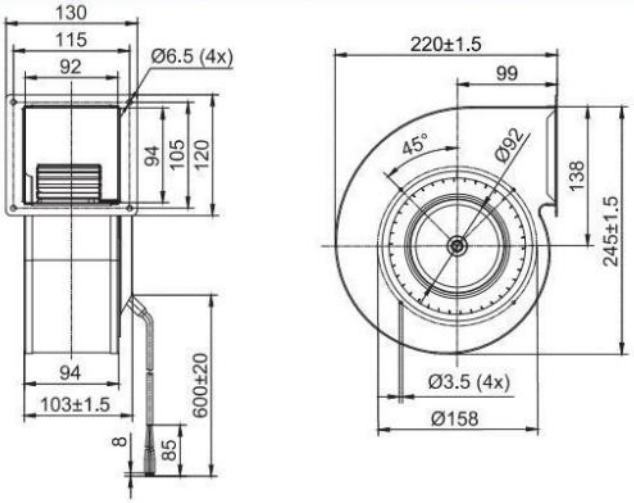

DC Centrifugal Blowers



DC Single Inlet Centrifugal Blower D180

- 材料**Material:** 镀锌钢板
  风轮**Impeller:** Galvanized steel plate
  转子 Rotor: 电泳Electrophoresis
  端盖 Electronics housing: 压铸铝Die-cast aluminium
- 叶片数量**Number of blades:** 34
- 防护等级**Degree of protection:** IP 44
- 绝缘等级**Insulation class:** B
- 安装位置**Installation position:** 任意Any
- 模式**Mode:**连续工作制 Continuous operation (S1)

	电机 **Motor**	曲线 **Curve**	额定电压 **Nominal Voltage**	额定电压范围 **Nominal Voltage Range**	电流 **Current**	转速 **Speed**	输入功率 **Max. input Power**
Type			VDC	VDC	A	RPM	W
FF3G180-24GL-90	BLDC92	Ⓐ	24	16~28	8.4	1600	200
FF3G180-48GL-90	BLDC92	Ⓐ	48	36~57	4.2	1600	200

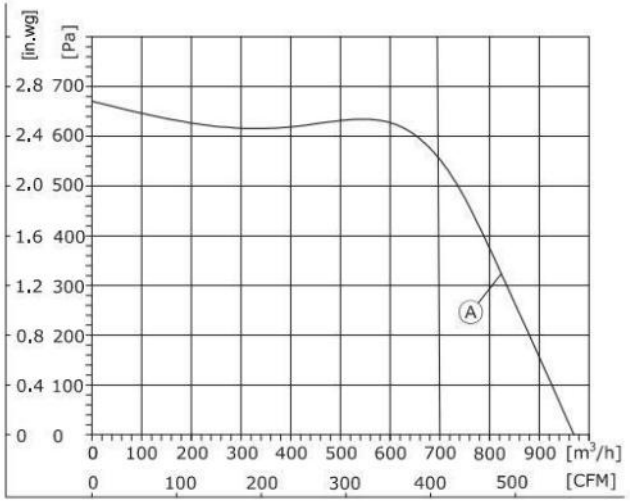

1、Air performance measured according to: ISO 5801, with DJ inlet ring without contact protection.
2、Intake-side sound level: LpA measured at 1 m distance from fan axis. The values given are only applicable under the specifi ed measuring conditions and may differ depending on the installation conditions.

DC Single Inlet Centrifugal Blower D180

- 旋转方向**Direction of rotation:** 正转，从转子方向Clockwise，viewed toward rotor
- 技术特性**Technical features:** 参见附图See connection diagram
- 泄漏电流**Touch curren:** < 3,5 mA
- 能效**Efficiency:** ErP2015
- 标准/证书**Valid For Approval/Standard:** CE,RoHS,ISO9001
  环境温度**Perm. ambient temp.:** -25℃~+60℃
- 安装**Mounting:** 免维护滚珠轴承Maintenance-free ball bearings

噪音等级 **Sound Pressure Level**	风量 **Air Flow**	风压 **Air Pressure**	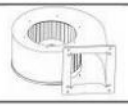	速度控制 **Speed Control**	接线图 **Wiring Mode**
dB(A)	m³/h	Pa	with scroll housing		
70	970	670	FS3G180-24GL-90	0-10VDC PWM RS-485	S2
70	970	670	FS3G180-48GL-90		S2

(前向离心风机Forward Centrifugal Blower Without Scroll Housing)
FF3G180-24GL-90/FF3G180-48GL-90

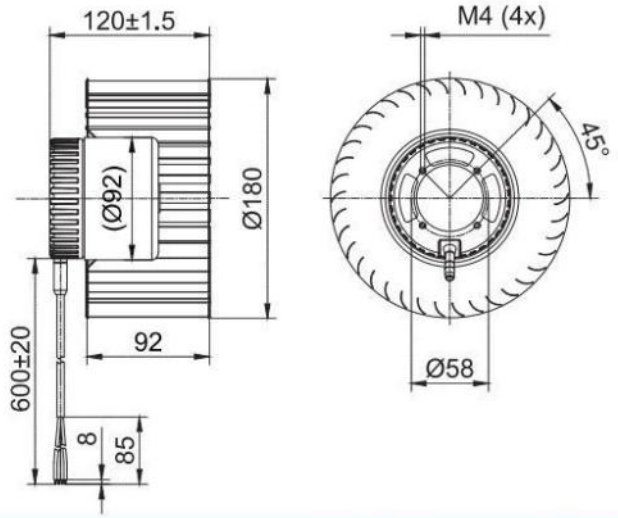

(单进风鼓风机Single Inlet Centrifugal Blower With Scroll Housing)
FS3G180-24GL-90/FS3G180-48GL-90

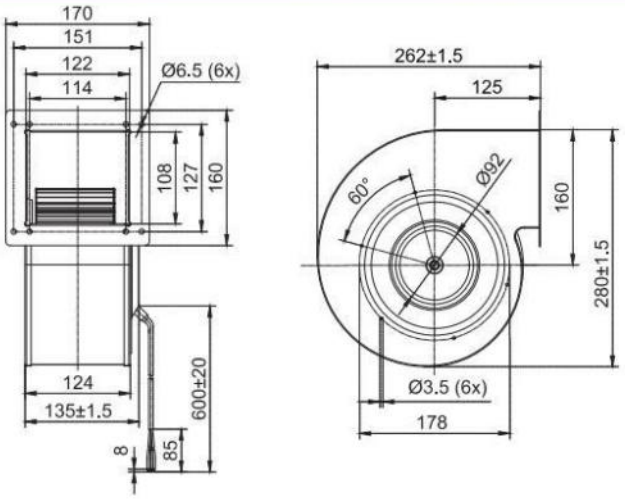

DC Blowers



DC Single Inlet Centrifugal Blower D200

- 材料**Material:** 镀锌钢板
  风轮**Impeller:** Galvanized steel plate
  转子 Rotor: 电泳Electrophoresis
  端盖 Electronics housing: 压铸铝Die-cast aluminium
- 叶片数量**Number of blades:** 38
- 防护等级**Degree of protection:** IP 44
- 绝缘等级**Insulation class:** B
- 安装位置**Installation position:** 任意Any
- 模式**Mode:**连续工作制 Continuous operation (S1)

DC Single Inlet Centrifugal Blower D200

- 旋转方向**Direction of rotation:** 正转，从转子方向Clockwise，viewed toward rotor
- 技术特性**Technical features:** 参见附图See connection diagram
- 泄漏电流**Touch curren:** < 3,5 mA
- 能效**Efficiency:** ErP2015
- 标准/证书**Valid For Approval/Standard:** CE,RoHS,ISO9001
  环境温度**Perm. ambient temp.:** -25℃~+60℃
- 安装**Mounting:** 免维护滚珠轴承Maintenance-free ball bearings

	电机 Motor	曲线 Curve	额定电压 Nominal Voltage	额定电压范围 Nominal Voltage Range	电流 Current	转速 Speed	输入功率 Max. input Power
Type			VDC	VDC	A	RPM	W
FF3G200-48GL-90	BLDC92	Ⓐ	48	36~57	4.6	1600	220

噪音等级 Sound Pressure Level	风量 Air Flow	风压 Air Pressure	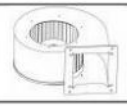	速度控制 Speed Control	接线图 Wiring Mode
dB(A)	m³/h	Pa	with scroll housing		
74	1000	980	FS3G200-48GL-90	0-10VDC PWM RS-485	S2

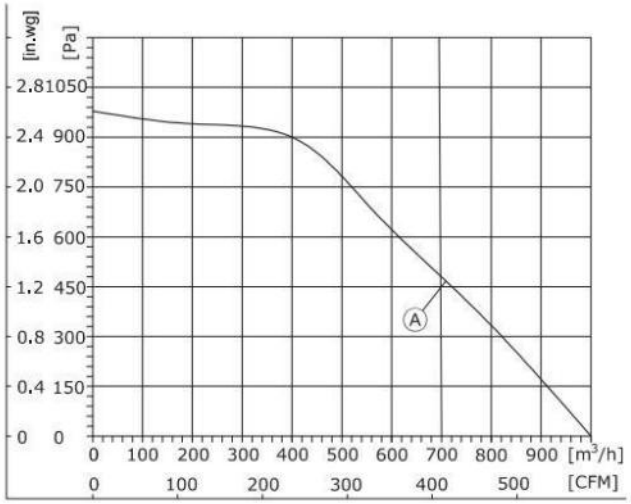

1、Air performance measured according to: ISO 5801, with DJ inlet ring without contact protection.
2、Intake-side sound level: LpA measured at 1 m distance from fan axis. The values given are only applicable under the specifi ed measuring conditions and may differ depending on the installation conditions.

DC Blowers

(前向离心风机Forward Centrifugal Blower Without Scroll Housing)
FF3G200-48GL-90

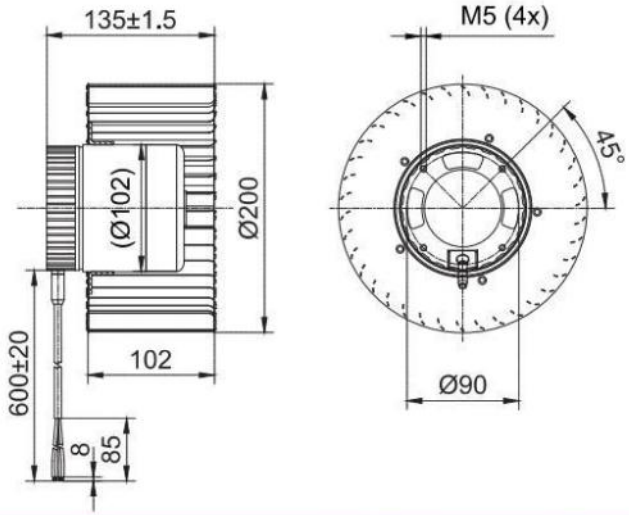

(单进风鼓风机Single Inlet Centrifugal Blower With Scroll Housing)
FS3G200-48GL-90

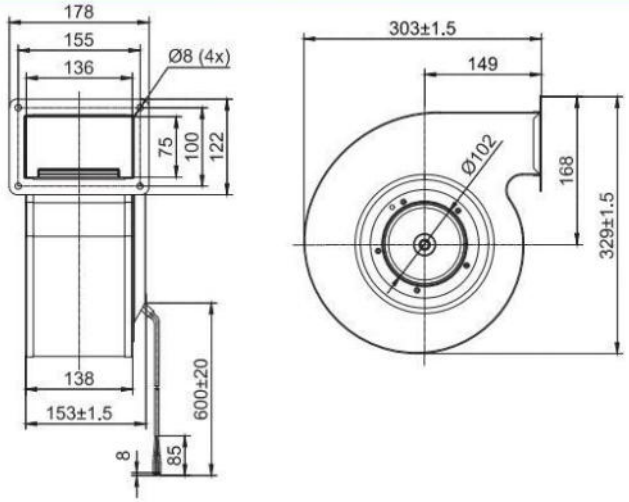

DC Double Inlet Centrifugal Blower D133



- 材料**Material:** 镀锌钢板
  风轮**Impeller:** Galvanized steel plate
  转子 Rotor: 电泳Electrophoresis
  端盖 Electronics housing: 压铸铝Die-cast aluminium
- 叶片数量**Number of blades:** 38
- 防护等级**Degree of protection:** IP 44
- 绝缘等级**Insulation class:** B
- 安装位置**Installation position:** 任意Any
- 模式**Mode:**连续工作制 Continuous operation (S1)

	电机 **Motor**	曲线 **Curve**	额定电压 **Nominal Voltage**	额定电压范围 **Nominal Voltage Range**	电流 **Current**	转速 **Speed**	输入功率 **Max. input Power**
Type			VDC	VDC	A	RPM	W
FD3G133-24GL-91	BLDC92	Ⓐ	24	16~28	6	1780	144
FD3G133-48GL-91	BLDC92	Ⓐ	48	36~57	3	1780	144

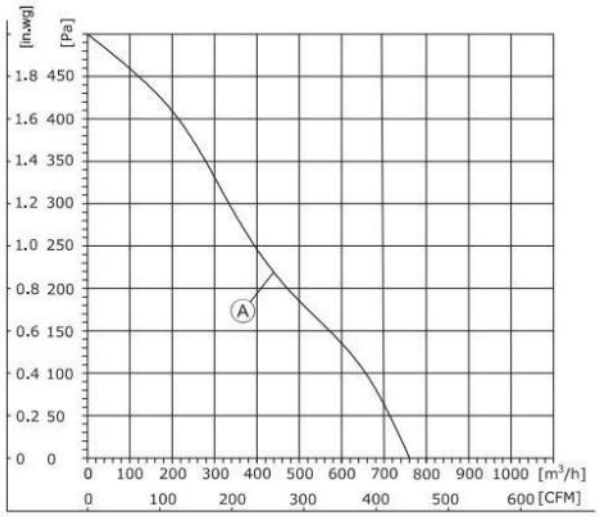

1、Air performance measured according to: ISO 5801, with DJ inlet ring without contact protection.
2、Intake-side sound level: LpA measured at 1 m distance from fan axis. The values given are only applicable under the specifi ed measuring conditions and may differ depending on the installation conditions.

DC Double Inlet Centrifugal BlowerD133

- 旋转方向**Direction of rotation:** 正转，从转子方向Clockwise，viewed toward rotor
- 技术特性**Technical features:** 参见附图See connection diagram
- 泄漏电流**Touch curren:** < 3,5 mA
- 能效**Efficiency:** ErP2015
- 标准/证书**Valid For Approval/Standard**：CE,RoHS,ISO9001
  环境温度**Perm. ambient temp.**：.-25℃~+60℃
- 安装**Mounting:** 免维护滚珠轴承Maintenance-free ball bearings

噪音等级 **Sound Pressure Level**	风量 **Air Flow**	风压 **Air Pressure**	速度控制 **Speed Control**	接线图 **Wiring Mode**
dB(A)	m³/h	Pa		
68	760	500	0-10VDC PWM RS-485	S2
68	760	500		S2

(双进风鼓风机**Dual Inlet Centrifugal Blower With Scroll Housing**)
FD3G146-2AGL-90/FD3G133-48GL-91

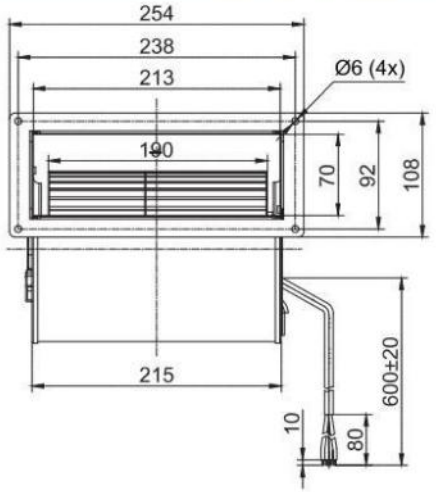

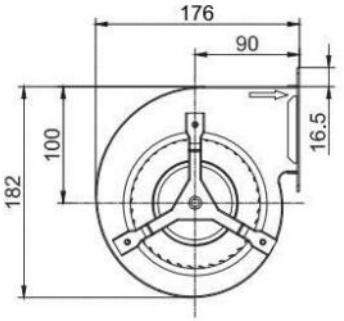

DC Blowers



DC Double Inlet Centrifugal Blower D146

- 材料**Material:** 塑料/镀锌钢板
  风轮**Impeller:** Plastic/Galvanized steel plate
  转子 Rotor: 电泳Electrophoresis
  端盖 Electronics housing: 压铸铝Die-cast aluminium
- 叶片数量**Number of blades:** 36/38
- 防护等级**Degree of protection:** IP 44
- 绝缘等级**Insulation class:** B
- 安装位置**Installation position:** 任意Any
- 模式**Mode:**连续工作制 Continuous operation (S1)

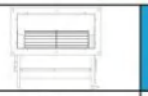	电机 Motor	曲线 Curve	额定电压 Nominal Voltage	额定电压范围 Nominal Voltage Range	电流 Current	转速 Speed	输入功率 Max. input Power
Type			VDC	VDC	A	RPM	W
FD3G146-24GL-90	BLDC92	Ⓐ	24	16~28	8.0	1700	190
FD3G146-48GL-90	BLDC92	Ⓐ	48	36~57	4.0	1700	190
FD3G146-24GL-91	BLDC92	Ⓑ	24	16~28	6.0	1580	144
FD3G146-48GL-91	BLDC92	Ⓑ	48	36~57	3.0	1580	144
FD3G146-48PV-90	BLDC92	Ⓒ	48	36~57	4.7	2050	223
FD3G146-310PV-90	BLDC92	Ⓒ	310	248~372	0.7	2050	223

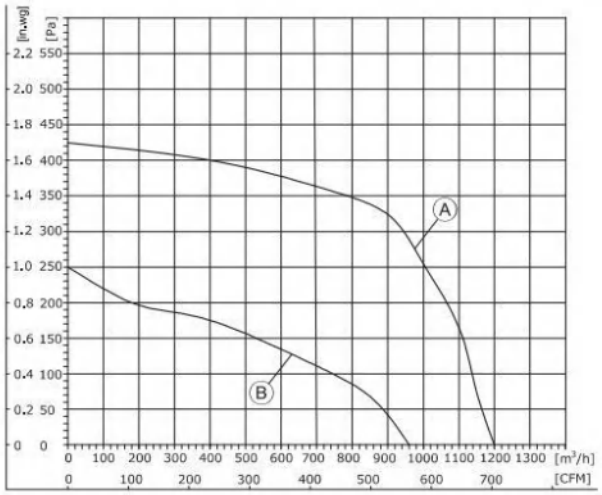

1、Air performance measured according to: ISO 5801, with DJ inlet ring without contact protection.
2、Intake-side sound level: LpA measured at 1 m distance from fan axis. The values given are only applicable under the specifi ed measuring conditions and may differ depending on the installation conditions.

DC Double Inlet Centrifugal Blower D146

- 旋转方向**Direction of rotation:** 正转，从转子方向Clockwise，viewed toward rotor
- 技术特性**Technical features:** 参见附图See connection diagram
- 泄漏电流**Touch curren:** < 3,5 mA
- 能效**Efficiency:** ErP2015
- 标准/证书**Valid For Approval/Standard**：CE,RoHS,ISO9001
  环境温度**Perm. ambient temp.**：.-25℃~+60℃
- 安装**Mounting:** 免维护滚珠轴承Maintenance-free ball bearings

噪音等级 Sound Pressure Level	风量 Air Flow	风压 Air Pressure	速度控制 Speed Control	接线图 Wiring Mode
dB(A)	m³/h	Pa		
66	1200	425	0-10VDC PWM RS-485	S2
66	1200	425		S2
61	960	250		S2
61	960	250		S2
63	1108	294		S2
63	1108	294		S2

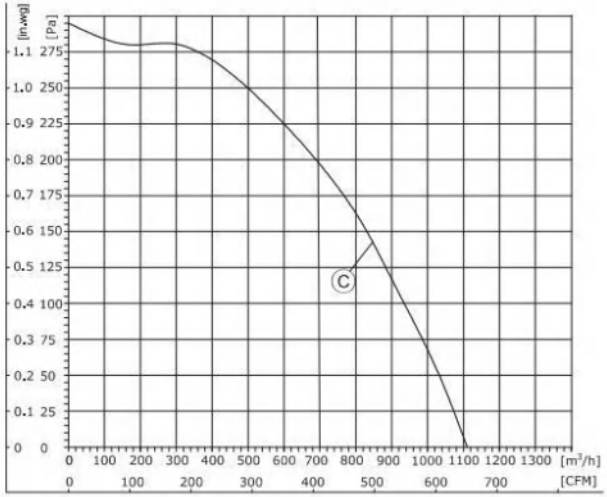

1、Air performance measured according to: ISO 5801, with DJ inlet ring without contact protection.
2、Intake-side sound level: LpA measured at 1 m distance from fan axis. The values given are only applicable under the specifi ed measuring conditions and may differ depending on the installation conditions.

(双进风鼓风机Dual Inlet Centrifugal Blower With Scroll Housing)
FD3G146-24GL-90/FD3G146-48GL-90

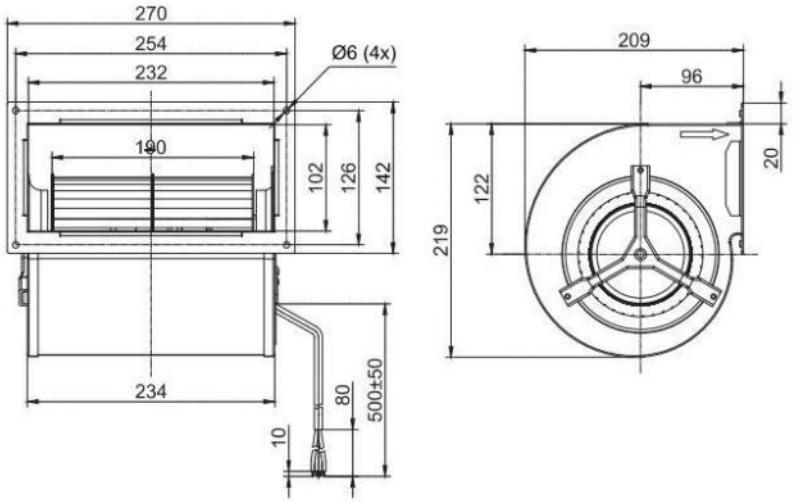

(双进风鼓风机Dual Inlet Centrifugal Blower With Scroll Housing)
FD3G146-48PV-90

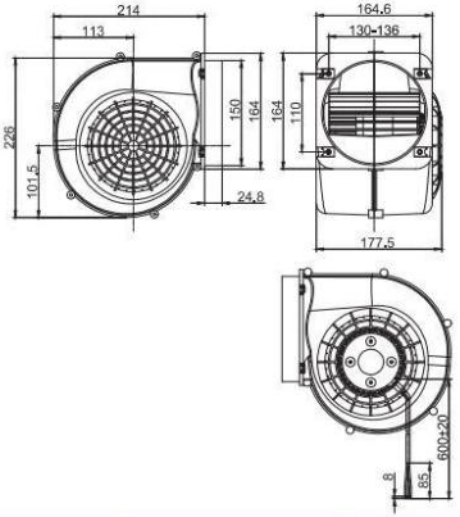

(双进风鼓风机Dual Inlet Centrifugal Blower With Scroll Housing)
FD3G146-24GL-91/FD3G146-48GL-91

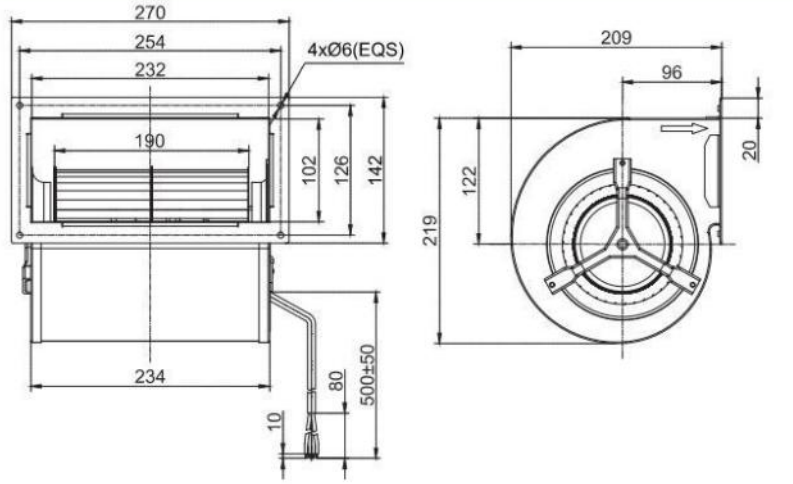

(双进风鼓风机Dual Inlet Centrifugal Blower With Scroll Housing)
FD3G146-310PV-90

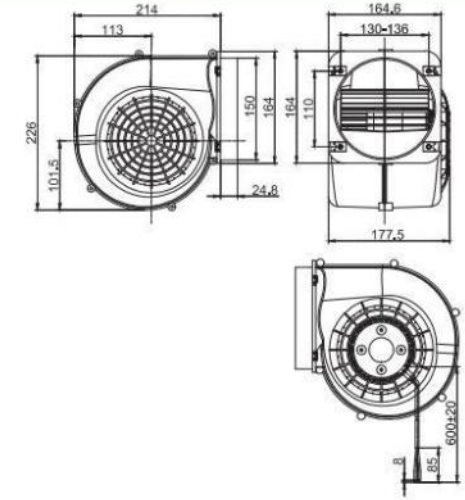

F1-BLEC72-230VAC

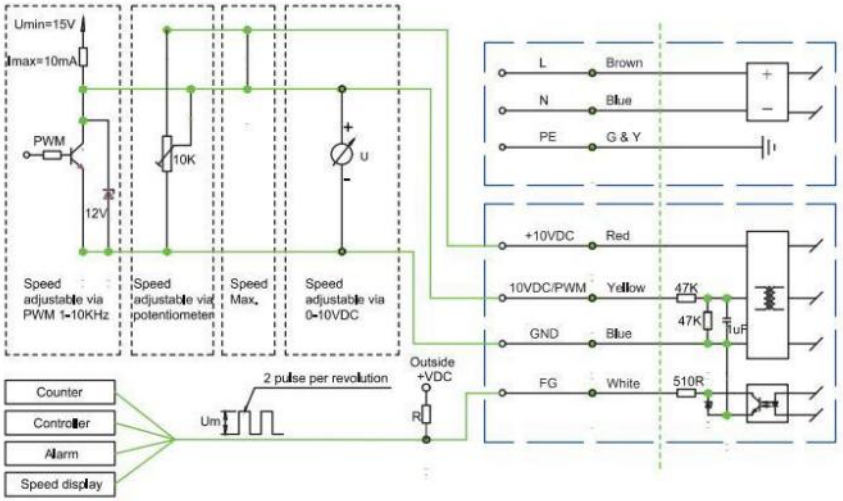

Customer circuit Connection Fan

电源线 Line	线径 AWG	功能 Single	颜色Colour	分配/函数 Assignment/function
电源连接 Power Conner	#18AWG	L	棕色 Brown	电源230VAC，市电50/60Hz Power supply 230VAC,Mains 50/60Hz
		N	蓝色 Blue	电源，中性导体，50/60Hz Power supply, neutral conductor, 50/60 Hz
		PE	黄绿色 G&Y	接地保护 Protective earth
控制连接 Control Connect	#22AWG	+10VDC	红色 Red	电压输出+10VDC，最大1.1 ma Voltage output +10VDC max.1.1mA
		0~10VDC/PWM	黄色 Yellow	控制输入0~10VDC或PWM Control input 0~10VDC or PWMut +10VDC
		FG	白色 White	转速输出:每转2次 Tach output:2 puls per revolution
		GND	蓝色 Blue	电线接地端 GND connection of control interface

F2-BLEC92-230VAC

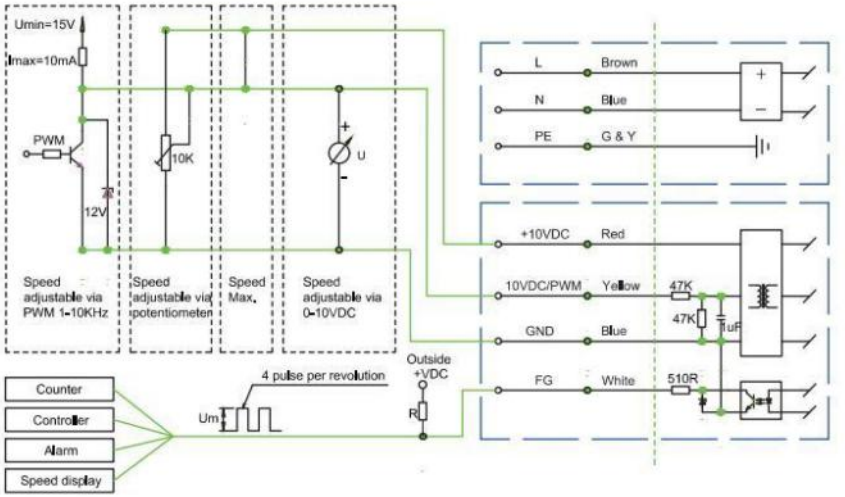

Customer circuit Connection Fan

电源线 Line	线径 AWG	功能 Single	颜色Colour	分配/函数 Assignment/function
电源连接 Power Conner	#18AWG	L	棕色 Brown	电源230VAC，市电50/60Hz Power supply 230VAC,Mains 50/60Hz
		N	蓝色 Blue	电源，中性导体，50/60Hz Power supply, neutral conductor, 50/60 Hz
		PE	黄绿色 G&Y	接地保护 Protective earth
控制连接 Control Connect	#22AWG	+10VDC	红色 Red	电压输出+10VDC，最大1.1 ma Voltage output +10VDC max.1.1mA
		0~10VDC/PWM	黄色 Yellow	控制输入0~10VDC或PWM Control input 0~10VDC or PWMut +10VDC
		FG	白色 White	转速输出:每转4次 Tach output:4 puls per revolution
		GND	蓝色 Blue	电线接地端 GND connection of control interface

F3-BLEC102-230VAC

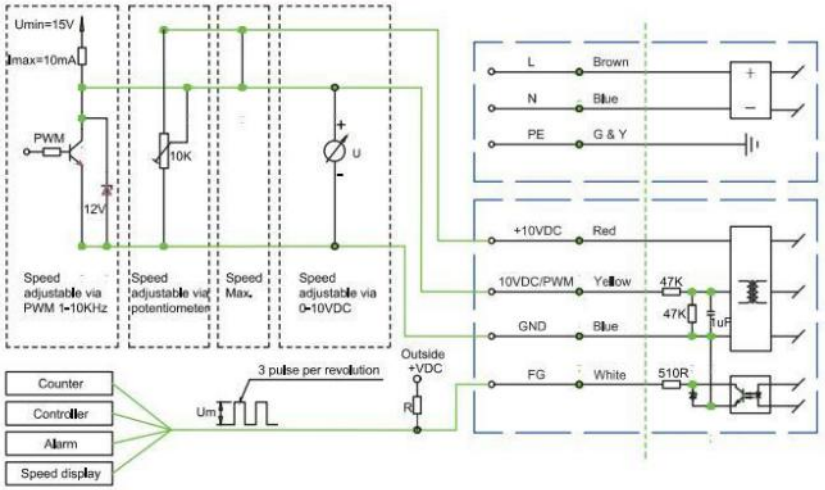

Customer circuit Connection Fan

电源线 Line	线径 AWG	功能 Single	颜色Colour	分配/函数 Assignment/function
电源连接 Power Conner	#18AWG	L	棕色 Brown	电源230VAC，市电50/60Hz Power supply 230VAC,Mains 50/60Hz
		N	蓝色 Blue	电源，中性导体，50/60Hz Power supply, neutral conductor, 50/60 Hz
		PE	黄绿色 G&Y	接地保护 Protective earth
控制连接 Control Connect	#22AWG	+10VDC	红色 Red	电压输出+10VDC，最大1.1 ma Voltage output +10VDC max.1.1mA
		0~10VDC/PWM	黄色 Yellow	控制输入0~10VDC或PWM Control input 0~10VDC or PWMut +10VDC
		FG	白色 White	转速输出:每转3次 Tach output:3puls per revolution
		GND	蓝色 Blue	电线接地端 GND connection of control interface

F4-BLEC102-380VAC

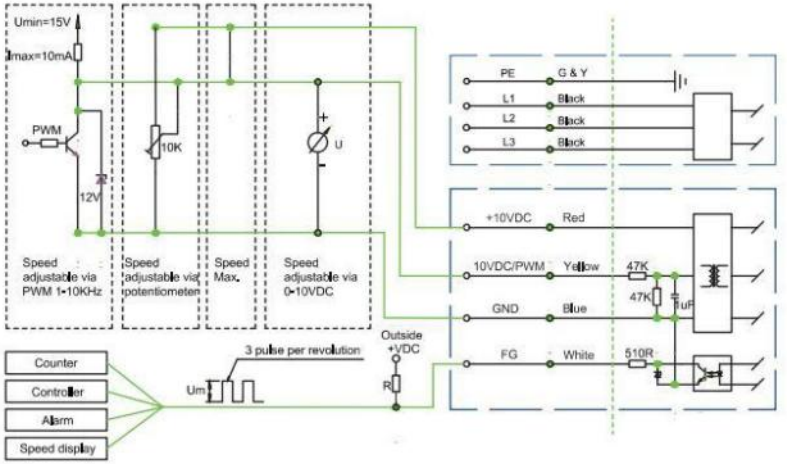

Customer circuit Connection Fan

电源线 Line	线径 AWG	功能 Single	颜色Colour	分配/函数 Assignment/function
电源连接 Power Conner	#18AWG	L1	黑色 Black	电源380VAC，频率50/60Hz Power supply 380VAC,Mains 50/60Hz
		L2	黑色 Black	电源380VAC，频率50/60Hz Power supply 380VAC,Mains 50/60Hz
		L3	黑色 Black	电源380VAC，频率50/60Hz Power supply 380VAC,Mains 50/60Hz
		PE	黄绿色 G&Y	接地保护 Protective earth
控制连接 Control Connect	#22AWG	+10VDC	红色 Red	电压输出+10VDC，最大1.1 ma Voltage output +10VDC max.1.1mA
		0~10VDC/PWM	黄色 Yellow	控制输入0~10VDC或PWM Control input 0~10VDC or PWMut +10VDC
		FG	白色 White	转速输出:每转3次 Tach output:3puls per revolution
		GND	蓝色 Blue	电线接地端 GND connection of control interface

F5-BLEC102-230VAC-Modbus485

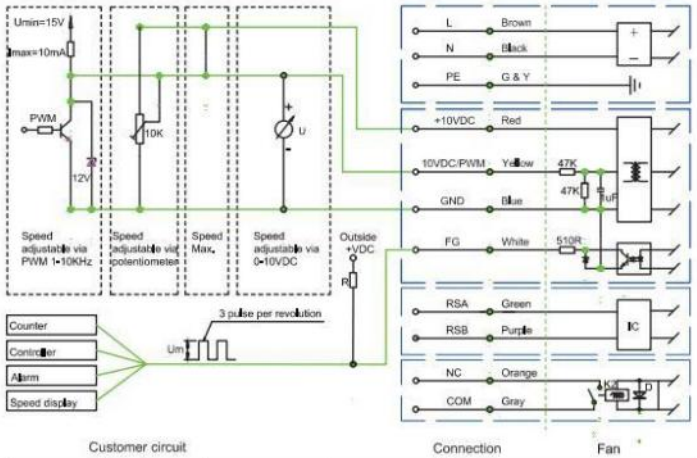

电源线 Line	线径 AWG	功能 Single	颜色Colour	分配/函数 Assignment/function
电源连接 Power Conner	#18AWG	L	棕色 Brown	电源230VAC，市电50/60Hz Power supply 230VAC,Mains 50/60Hz
		N	蓝色 Blue	电源，中性导体，50/60Hz Power supply, neutral conductor, 50/60 Hz
		PE	黄绿色 G&Y	接地保护 Protective earth
		NC	橙色 Orange	报警开关 Alarm switch
		COM	灰色 Gray	报警开关 Alarm switch
控制连接 Control Connect	#22AWG	+10VDC	红色 Red	电压输出+10VDC，最大1.1 ma Voltage output +10VDC max.1.1mA
		0-10VDC/PWM	黄色 Yellow	控制输入0-10VDC或PWM Control input 0-10VDC or PWMut +10VDC
		FG	白色 White	转速输出:每转3次 Tach output:3puls per revolution
		GND	蓝色 Blue	电线控地端 GND connection of control interface
		RSA	绿色 Green	RS485接口，用于MODBUS,RSA RS485 interface for MODBUS,RSA
		RSB	紫色 Purple	RS485接口，用于MODBUS,RSB RS485 interface for MODBUS,RSB

F6-BLEC102-380VAC-Modbus485

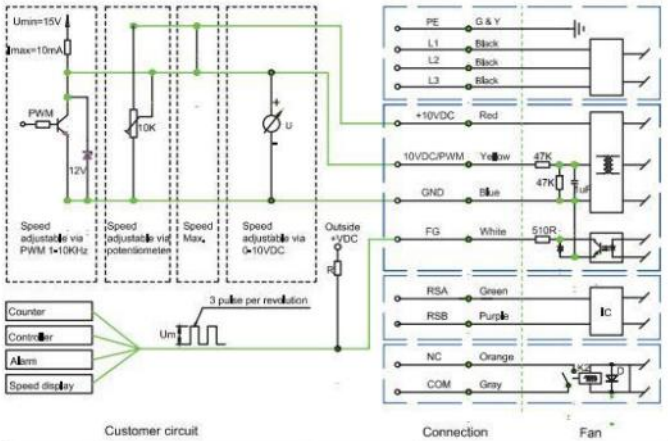

电源线 Line	线径 AWG	功能 Single	颜色Colour	分配/函数 Assignment/function
电源连接 Power Conner	#18AWG	L1	黑色 Black	电源380VAC，频率50/60Hz Power supply 380VAC,Mains 50/60Hz
		L2	黑色 Black	电源380VAC，频率50/60Hz Power supply 380VAC,Mains 50/60Hz
		L3	黑色 Black	电源380VAC，频率50/60Hz Power supply 380VAC,Mains 50/60Hz
		PE	黄绿色 G&Y	接地保护 Protective earth
		NC	橙色 Orange	报警开关 Alarm switch
		COM	灰色 Gray	报警开关 Alarm switch
控制连接 Control Connect	#22AWG	+10VDC	红色 Red	电压输出+10VDC，最大1.1 ma Voltage output +10VDC max.1.1mA
		0-10VDC/PWM	黄色 Yellow	控制输入0-10VDC或PWM Control input 0-10VDC or PWMut +10VDC
		FG	白色 White	转速输出:每转3次 Tach output:3puls per revolution
		GND	蓝色 Blue	电线接地端 GND connection of control interface
		RSA	绿色 Green	RS485接口，用于MODBUS,RSA RS485 interface for MODBUS,RSA
		RSB	紫色 Purple	RS485接口，用于MODBUS,RSB RS485 interface for MODBUS,RSB

F7-BLEC137&188-230VAC-Modbus485

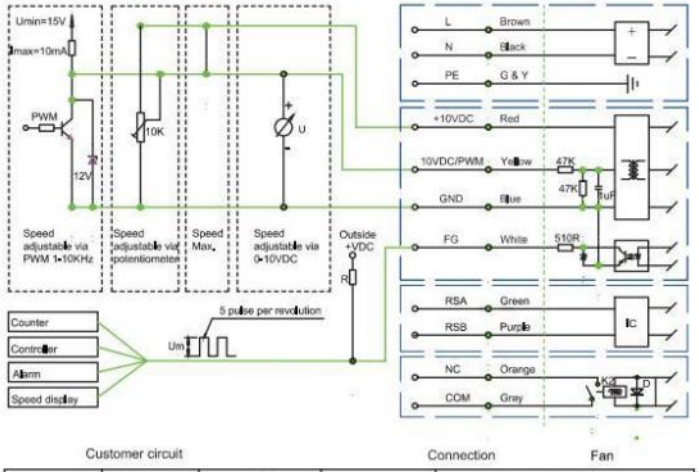

电源线 Line	线径 AWG	功能 Single	颜色Colour	分配/函数 Assignment/function
电源连接 Power Conner	#18AWG	L	棕色 Brown	电源230VAC，市电50/60Hz Power supply 230VAC,Mains 50/60Hz
		N	蓝色 Blue	电源，中性导体，50/60Hz Power supply, neutral conductor, 50/60 Hz
		PE	黄绿色 G&Y	接地保护 Protective earth
		NC	橙色 Orange	报警开关 Alarm switch
		COM	灰色 Gray	报警开关 Alarm switch
控制连接 Control Connect	#22AWG	+10VDC	红色 Red	电压输出+10VDC，最大1.1 ma Voltage output +10VDC max.1.1mA
		0-10VDC/PWM	黄色 Yellow	控制输入0-10VDC或PWM Control input 0-10VDC or PWMut +10VDC
		FG	白色 White	转速输出:每转5次 Tach output:5puls per revolution
		GND	蓝色 Blue	电线接地端 GND connection of control interface
		RSA	绿色 Green	RS485接口，用于MODBUS,RSA RS485 interface for MODBUS,RSA
		RSB	紫色 Purple	RS485接口，用于MODBUS,RSB RS485 interface for MODBUS,RSB

F8-BLEC137&188-380VAC-Modbus485

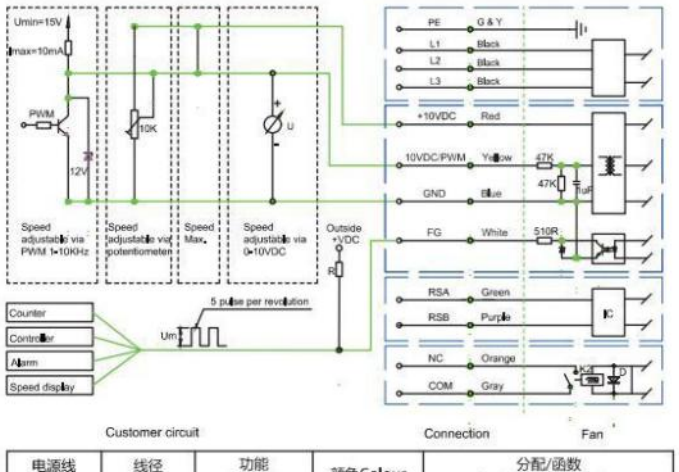

电源线 Line	线径 AWG	功能 Single	颜色Colour	分配/函数 Assignment/function
电源连接 Power Conner	#18AWG	L1	黑色 Black	电源380VAC，频率50/60Hz Power supply 380VAC,Mains 50/60Hz
		L2	黑色 Black	电源380VAC，频率50/60Hz Power supply 380VAC,Mains 50/60Hz
		L3	黑色 Black	电源380VAC，频率50/60Hz Power supply 380VAC,Mains 50/60Hz
		PE	黄绿色 G&Y	接地保护 Protective earth
		NC	橙色 Orange	报警开关 Alarm switch
		COM	灰色 Gray	报警开关 Alarm switch
控制连接 Control Connect	#22AWG	+10VDC	红色 Red	电压输出+10VDC，最大1.1 ma Voltage output +10VDC max.1.1mA
		0-10VDC/PWM	黄色 Yellow	控制输入0-10VDC或PWM Control input 0-10VDC or PWMut +10VDC
		FG	白色 White	转速输出:每转5次 Tach output:5puls per revolution
		GND	蓝色 Blue	电线接地端 GND connection of control interface
		RSA	绿色 Green	RS485接口，用于MODBUS,RSA RS485 interface for MODBUS,RSA
		RSB	紫色 Purple	RS485接口，用于MODBUS,RSB RS485 interface for MODBUS,RSB

S1-BLDC72-12&24&48&85&110&310VDC

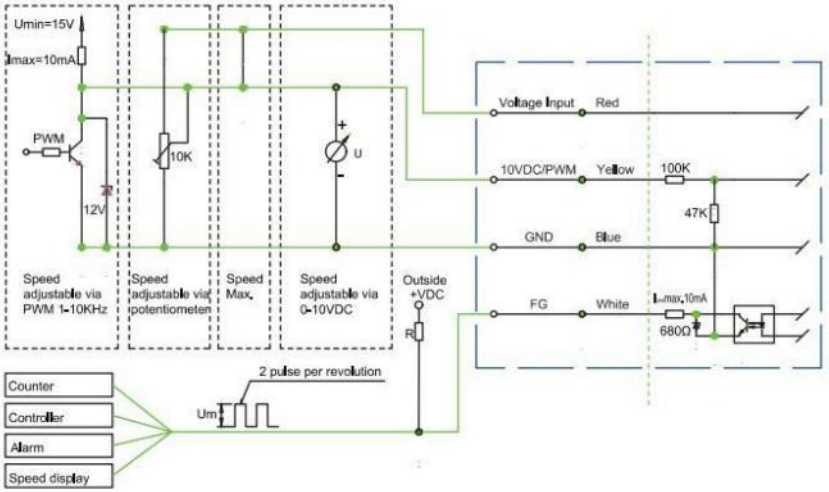

Customer circuit Connection Fan

电源线 Line	线径 AWG	功能 Single	颜色Colour	分配/函数 Assignment/function
电源连接 Power Conner	#20AWG	+	红色 Red	电压输入+* VDC Voltage input +* VDC
		0~10VDC/PWM	黄色 Yellow	控制输入0~10VDC或PWM Control input 0~10VDC or PWMut +10VDC
控制连接 Control Connect		FG	白色 White	转速输出:每转2次 Tach output:2puls per revolution
		-	蓝色 Blue	电线接地端 GND connection of control interface

S2-BLDC92-12&24&48&85&110&310VDC

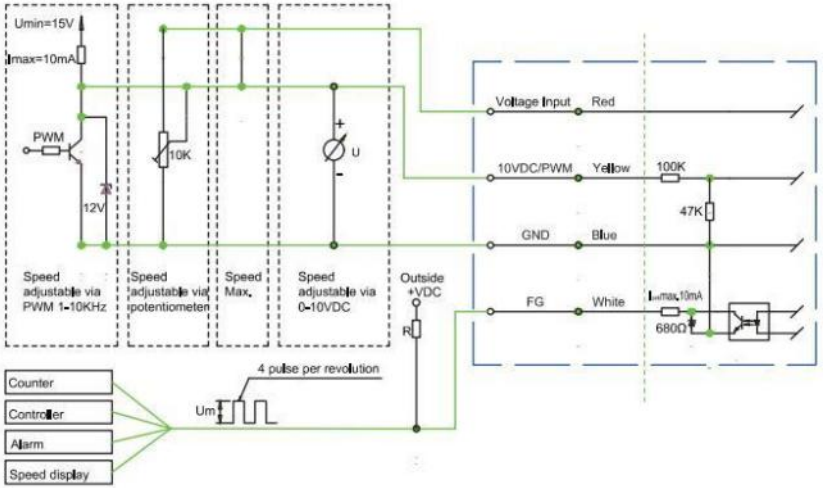

Customer circuit Connection Fan

电源线 Line	线径 AWG	功能 Single	颜色Colour	分配/函数 Assignment/function
电源连接 Power Conner	#20AWG	+	红色 Red	电压输入+* VDC Voltage input +* VDC
		0~10VDC/PWM	黄色 Yellow	控制输入0~10VDC或PWM Control input 0~10VDC or PWMut +10VDC
控制连接 Control Connect		FG	白色 White	转速输出:每转4次 Tach output:4puls per revolution
		-	蓝色 Blue	电线接地端 GND connection of control interface

S3-BLDC102-12&24&48&85&110&310VDC

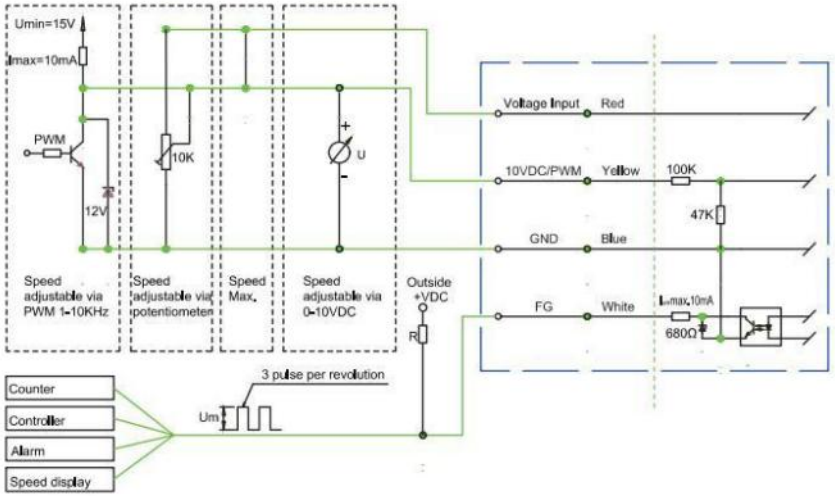

Customer circuit Connection Fan

电源线 Line	线径 AWG	功能 Single	颜色Colour	分配/函数 Assignment/function
电源连接 Power Conner	#20AWG	+	红色 Red	电压输入+* VDC Voltage input +* VDC
		0~10VDC/PWM	黄色 Yellow	控制输入0~10VDC或PWM Control input 0~10VDC or PWMut +10VDC
控制连接 Control Connect		FG	白色 White	转速输出:每转3次 Tach output:3puls per revolution
		-	蓝色 Blue	电线接地端 GND connection of control interface

S4-BLDC137-12&24&48&85&110&310VDC

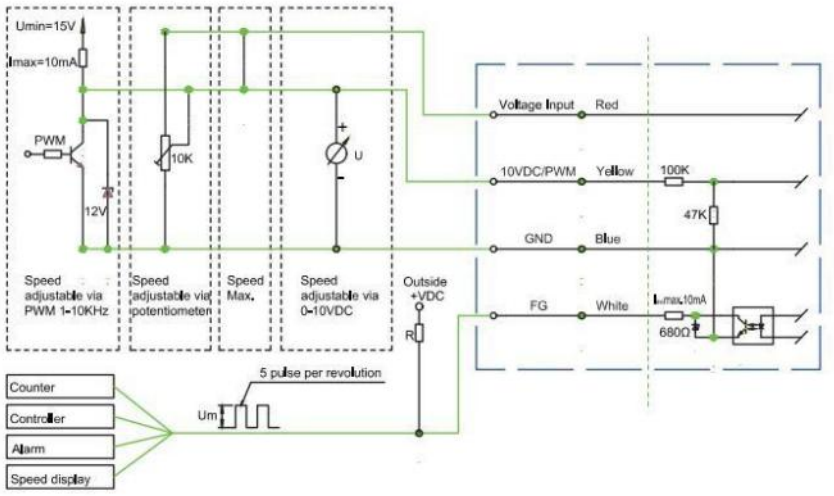

Customer circuit Connection Fan

电源线 Line	线径 AWG	功能 Single	颜色Colour	分配/函数 Assignment/function
电源连接 Power Conner	#20AWG	+	红色 Red	电压输入+* VDC Voltage input +* VDC
		0~10VDC/PWM	黄色 Yellow	控制输入0~10VDC或PWM Control input 0~10VDC or PWMut +10VDC
控制连接 Control Connect		FG	白色 White	转速输出:每转5次 Tach output:5puls per revolution
		-	蓝色 Blue	电线接地端 GND connection of control interface

导风圈伸进风轮中左右间隙和深度安装标准

The air deflector ring extends into the wind wheel, the left and right clearance and depth are installed as standard

导风圈和风轮之间的轴向深度会直接影响风机的风量的效率
轴向深度影响曲线如右图

The axial overlap between the inlet ring and the impeller cover affects centrifugal fan air flow and operation efficiency.
Overlap changes affect the following curve:

①：x / D = 0.6%　②：x / D = 0%　③：x / D = -0.8%

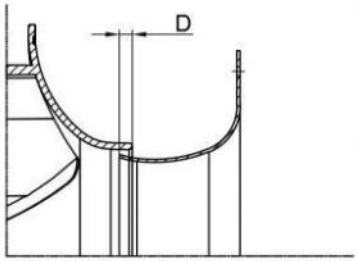

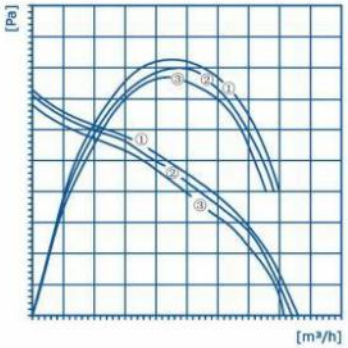

导风圈和风轮之间的轴向深度会直接影响风机的风量的效率
轴向深度影响曲线如右图

The centrifugal air gap between the inlet ring and the impeller cover affects centrifugal fan air flow and operation efficiency.
Changes in the size of the inlet ring air gap affects the following curve:

①：s / D = 0.4%　②：s / D = 1.0%　③：s / D = 1.4%

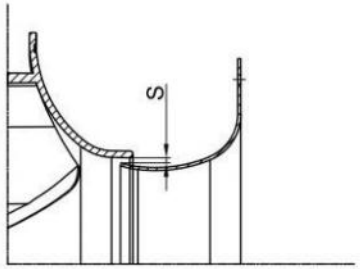

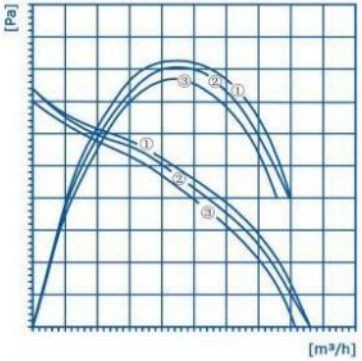

风机在箱体中的安装标准

Effects of installation space

将我们的产品安装在矩形盒子中时，空气性能
可能会减少

When mounting our product in a rectangular box, air performance might be reduced.

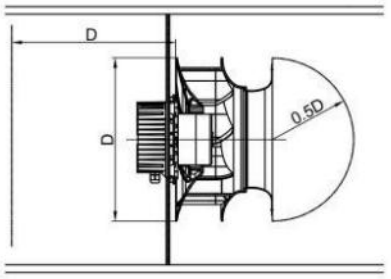

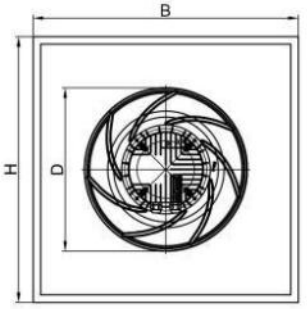

dh = Hydraulic diameter
公式Formula: dh = 2 x B x H / (B + H)
B = 盒子宽Width of box
H = 盒子高Height of box
D = 风机尺寸Outer diameter of the fan

Curve:

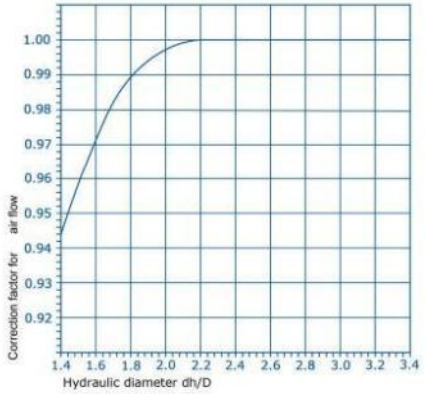

|静压孔K因子|

Defining air flow rate for inlet rings with pressure relief

计算导风圈外部和导风圈内部的压力差，压力差可以根据以下公式计算
The differential pressure approach compares the static pressure before the inlet nozzle with the static pressure inside the inlet nozzle. Air flow can be calculated on the basis of the differential pressure (difference in pressure of the static pressures) in keeping with the following equation:

$$qv = k \cdot \sqrt{\Delta p}$$ qv in [m³/h] and Δp in [Pa]

如果要控制恒定的气流，则喷嘴压力必须保持不变：
If constant air flow is to be controlled to, then the nozzle pressure has to be kept constant:

$$\Delta p = qv^2 : k^2$$

k因子考虑了特定的喷嘴特性，静压差以 1/4 个测量点测量进气喷嘴的周长。客户端的连接是通过预装的 T 型管连接器完成。该管连接器是适用于内径为 4 mm 的气动软管。
k takes into account the specific nozzle characteristics.
Differences in static pressure are measured in 1/4 measuring point(s) along the circumference of the inlet nozzle. Connection on the customer side is acomplished via a pre-mounted T tube connector. This tube connector is suited for pneumatic hoses with an internal diameter of 4 mm.

k-factors				
Fan size	280	310	355	400
k-factors	77	93	128	180

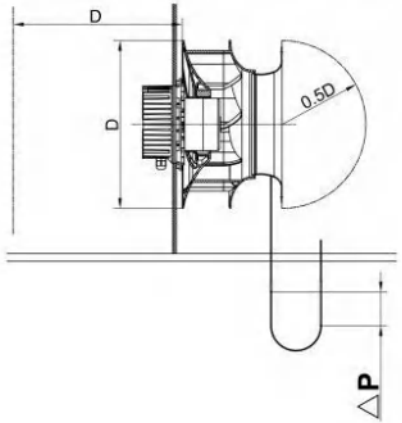

|多台设备共同安装后的噪音值计算标准|

The standard for calculating noise levels after multiple devices are installed together

当测量鑫恒鑫风机的噪音时，需满足以下条件
Measurement conditions for air and noise measurement Fanstar products are measured under the following conditions:
1. 轴流风机必须是吸风风向。2. 后向离心风机必须带有。3. 单进风和双进风鼓风机必须带有蜗壳
1.Axial and diagonal fans in direction of rotation "V" in full nozzle and
2.Backward curved centrifugal fans, free-running and with inlet nozzle
3.Forward curved single and dual inlet centrifugal fans with housing

噪音测试Noise measurements
所有的噪音测试必须在低频的测试房间内进行，被测试的风机固定在墙体中，测试条件是标准电压环境下，无其他阻挡类的防护网罩等，保证风机前端无其他遮挡物
All noise measurements are carried out in low-reflective test rooms with reverberant floor, the fans being tested are placed in a reverberant wall and operated at nominal voltage (for AC, also at nominal frequency) without additional attachments such as the guard grille.

声音的测试标准和声压级测试标准
Sound pressure level and sound level
风机测试符合ISO13347,DIN45635和ISO3744/3745的2类标准，并且输出方式是A计权，一般情况下麦克风放置在距离风机1米的距离测试风机的声压级
All acoustic values are established according to ISO 13347, DIN 45635 and ISO 3744/3745 to accuracy class 2 and given in A-rated form.
When the sound pressure level (Lp) is measured, the microphone is on the intake side of the fan being tested, usually at a distance of 1 m on the fan axis.

在被测试的风机的四周放置10个麦克风，测试出风机的声压级水平，再通过公式计算可以得到风机的声功率级水平
To measure the sound power level (Lw), 10 microphones are distributed over an enveloping surface on the intake side of the fan being tested (see graphic). The sound power level measured can be roughly calculatedfrom the sound pressure level by adding 7 dB.

d ≥ D
H = 1.5d ... 4.5d
Measurement area S = 6d²+7d(H+1.5d)

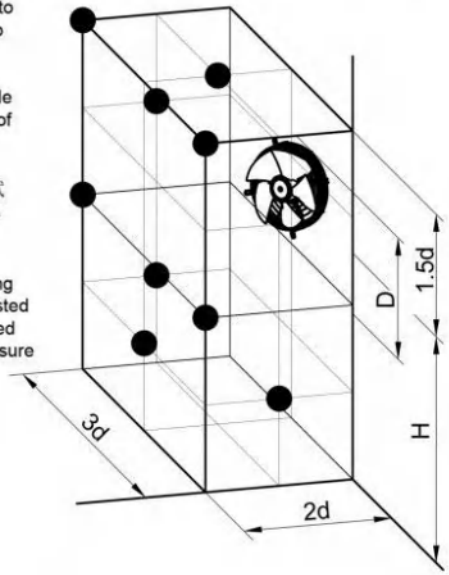

相同噪音的风机组合对整体噪音的影响
The influence of a fan combination of the same noise on the overall noise

多个相同级别声音的风机组合在一起时，可以参考右图表，当增加两个相同声音源的风机时，整体声音会增加3dBA,可以根据图表计算多个设备一起产生的额外噪音值
Combined level of multiple same-level sound sources
Adding 2 noise sources with the same level results in a level increase of approx. 3 dB.
The noise characteristics of multiple identical fans can be determined in advance based on
the noise values specified in the data sheet. This is shown in the diagram opposite.

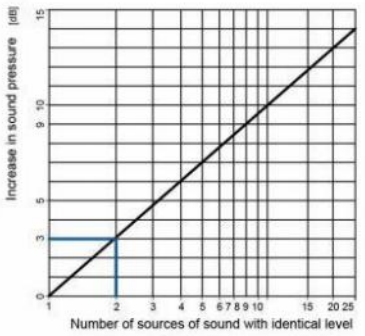

不同噪音的风机组合对整体噪音的影响
The influence of a fan combination of different noise on the overall noise

当两台不同声音水平的风机安装在一起后，首先确认高分贝和低分的差值，根据右图曲线，假如是相差4dBA，则整体噪音值增加1.4dBA，即现在噪音水平是高分贝+1.4dBA值
When the two -different fan -level fan is installed together, first confirm the difference between the high decibel and the low score. According to the right curve, if it is 4dBA, the overall noise value increases by 1.4dBA, that is, the noise level is high decibel+ now the high decibel+ 1.4dBA value

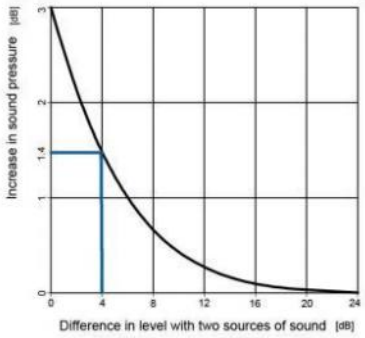

风机的安装距离对整体噪音的影响
The installation distance of the fan on the overall noise

因为的风机的噪音测试标准是以1米为标准，当固定麦克风后，风机放置的远近会对测量的噪音产生较大影响，距离麦克风越远，噪音值越低，成反比关系，如右图所示，当风机在1米的基础上移到距离麦克风5米的距离处时，测量的噪音值减小14dBA，即1米处的噪音值-14dBA。
Because the noise test standard of the fan is based on 1 meter, when the microphone is fixed, the distance and near and near the aircraft will have a great impact on the measured noise. The farther the microphone is, the lower the noise value. It is shown that when the fan moves at a distance of 5 meters from the microphone on the basis of 1 meter, the measured noise value is reduced by 14DBA, that is, the noise value of 1 meter-14DBA.

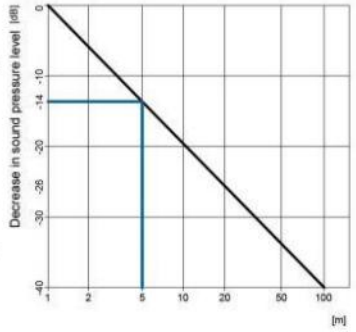



流动的清新，尽享效率之美

A Moveable Freshness

Enjoying The Beauty Of Efficiency To The Fullest

FANOVA

苏州鑫恒鑫电机有限公司

Fanova(Suzhou) Motor Technology Co., LTD

地址/ADD：中国江苏省苏州市相城经济开发区富元路739号7号楼2楼，邮编：215100

2ND FLOOR BUILDING7,NO.739.FUYUAN ROAD ECONOMIC DEVELOPMENT ZONE

XIANGCHENG DISTRICT,SUZHOU CITY,JIANGSU PROVINCE,PR.CHINA

电话/TEL：+86 - 512 - 66152110

邮箱/E-MAIL：sales01 @fanova-tech.com 网址/Website：www.fanova-tech.com